Feature Supplement Manual

YP2425F-2470, YP4025F-1630 and YP4025F-1670

YP2425F and YP4025F Dry Fertilizer/Seeder

Great Plains
Manufacturing, Inc.
www.greatplainsmfg.com

Read the operator manual entirely. When you see this symbol, the subsequent instructions and warnings are serious - follow without exception. Your life and the lives of others depend on it!

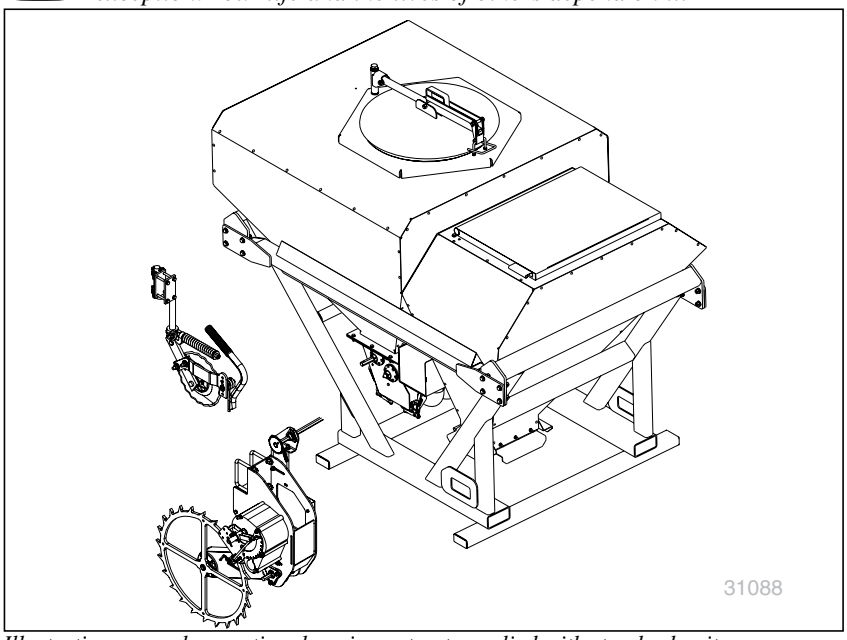

Illustrations may show optional equipment not supplied with standard unit or may depict similar models where a topic is identical.

ORIGINAL INSTRUCTIONS

EN

© Copyright 2013 Printed 2013-03-25 403-362M

Table of Contents

Important Safety Information 1
Safety Decals 4
Introduction 6
Description of Unit 6
Intended Usage 6
Models Covered 6
Document Family 7
Using This Manual 7
Definitions 7
Preparation and Setup 8
Initial Setup 8
Post-Delivery/Seasonal Setup 8
Hitching and Leveling 8
Operating Instructions 9
Pre-Start Checklist 9
Planter Folding and Raising 9
Transport 10
Typical YP2425F Weights 10
Typical YP4025F Weights 10
Loading Materials 11
Loading Seed 11
Loading Fertilizer 12
Changing Seed Box or Hopper 13
Air Systems Operation 14
Seeding System Overview 15
Fertilizer System Overview 17
Fan Circuit Operation 18
Fan General Operating Information 19
Butterfly Valves 19
Butterfly Valve Operation: 19
Symptoms of Insufficient Air Flow 19
Symptoms of Excessive Air Flow 19
Monitor Operation 20
Marker Operation 20
Field Set-Up Checklists 21
Field Operation 21
Short-Term Parking 21
Long-Term Storage 21
Adjustments 22
Setting Material Rates 23
Setting Seed Rate 23
Setting Dry Fertilizer Rate 23
Seed Meter Final Drive Range 23
Setting Variable Rate Gearbox 24
Meter Calibration 25
Revolutions for Sample Size 25
Calibration Procedure 25
Initial Calibration Steps 25
Row Sample Calibration 26
Meter Sample Calibration 27
Calibration Adjustment 28
Calibration: Rate Calculation 28
Calibration: Gearbox Adjustment 28
Coulter Adjustment 29
Coulter Height Adjustment 29
Coulter Applicator Adjustment 29
Frame-Mounted Coulter Force 30
Troubleshooting 31
Maintenance 34
Maintenance 34
No-Change Maintenance Items 34
Material Clean-Out 35
Seeding System Clean-Out 35
Fertilizer System Clean-Out 35
Meter Flute Replacement 36
Problem Fertilizer Clean-Outs 36
Removing Meter Box 37
Hopper Entry 37
Chain Maintenance 39
Fertilizer Meter Drive Chain 39
Maintenance Schedule 40
Seed Lubricants 45
Options 46
Compatible Options 46
Options Not Recommended 46
Incompatible Options 46
Appendix A - Reference Information 47
Specifications and Capacities YP4025F 47
Tire Inflation Chart 47
Specifications and Capacities YP2425F 48
Torque Values Chart 49
Hydraulic Diagrams 49
Chain Routing YP2425F 50
Chain Routing YP4025F 51
Appendix B - Monitor Setup 53
Seed Monitor Console Setup 53
Pre-Programming Preparation: 53

© Copyright 2012, 2013 All rights Reserved

Great Plains Manufacturing, Inc. provides this publication “as is” without warranty of any kind, either expressed or implied. While every precaution has been taken in the preparation of this manual, Great Plains Manufacturing, Inc. assumes no responsibility for errors or omissions. Neither is any liability assumed for damages resulting from the use of the information contained herein. Great Plains Manufacturing, Inc. reserves the right to revise and improve its products as it sees fit. This publication describes the state of this product at the time of its publication, and may not reflect the product in the future.

Trademarks of Great Plains Manufacturing, Inc. include: Singulator Plus, Swath Command, Terra-Tine.
Registered Trademarks of Great Plains Manufacturing, Inc. include:
Air-Pro, Clear-Shot, Discovator, Great Plains, Land Pride, MeterCone, Nutri-Pro, Seed-Lok, Solid Stand, Terra-Guard, Turbo-Chisel, Turbo-Chopper, Turbo Max, Turbo-Till, Ultra-Till, Verti-Till, Whirlfilter, Yield-Pro.
Brand and Product Names that appear and are owned by others are trademarks of their respective owners.

Printed in the United States of America

Change User Level to Dealer Level 53
Auto Configuration 54
To Run Auto Config:..... 54
Row Status/Row Width Setup 54
Material Configuration Setup
(Controlled Hydraulic Drive) 55
Planter Control Channel Setup 56
Valve Calibration 57
Row Monitor Setup 57
Speed Set Calibration Setup..... 58
Accessory Sensor Setup..... 59
Hopper Assignment..... 59
RPM Assignment 59
Clutch Folding Module (CFM) Setup 60
Clutch Folding Module Operation 60
5 Revolution Test.....60
Summary Screen.....61
Appendix C - Fertilizer Rate Charts 62
Reading the Fertilizer Rate Chart 62
Fertilizer Rates 63
Fertilizer Rates, 70cm Row Spacing.....64
Fertilizer Rates, 30 inch Row Spacing.....65
Density Adjustment.....66
Index 67

Important Safety Information

Look for Safety Symbol

The SAFETY ALERT SYMBOL indicates there is a potential hazard to personal safety involved and extra safety precaution must be taken. When you see this symbol, be alert and carefully read the message that follows it. In addition to design and configuration of equipment, hazard control and accident prevention are dependent upon the awareness, concern, prudence and proper training of personnel involved in the operation, transport, maintenance and storage of equipment.

Be Aware of Signal Words

Signal words designate a degree or level of hazard seriousness.

DANGER indicates an imminently hazardous situation which, if not avoided, will result in death or serious injury. This signal word is limited to the most extreme situations, typically for machine components that, for functional purposes, cannot be guarded.

WARNING indicates a potentially hazardous situation which, if not avoided, could result in death or serious injury, and includes hazards that are exposed when guards are removed. It may also be used to alert against unsafe practices.

CAUTION indicates a potentially hazardous situation which, if not avoided, may result in minor or moderate injury. It may also be used to alert against unsafe practices.

Prepare for Emergencies

- ▲ *Be prepared if a fire starts.*
- ▲ *Keep a first aid kit and fire extinguisher handy.*
- ▲ *Keep emergency numbers for doctor, ambulance, hospital and fire department near phone.*

Be Familiar with Safety Decals

- ▲ *Read and understand "**Safety Decals**" on page 4, thoroughly.*
- ▲ *Read all instructions noted on the decals.*
- ▲ *Keep decals clean. Replace damaged, faded and illegible decals.*

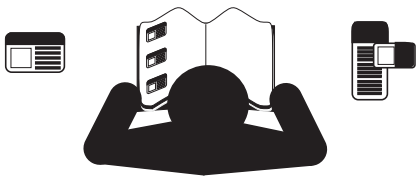

Wear Protective Equipment

Great Plains advises use of the following personal safety equipment.

▲ *Hearing protection, such as earmuffs or earplugs, for making planter adjustments with the hydraulic fan running.Prolonged exposure to loud noise can cause hearing impairment or loss.*

Avoid wearing entertainment headphones while operating machinery. Operating equipment safely requires the full attention of the operator.

▲ *Face shield, goggles or full face respirator when handling treated seed, seed lubricants or seed treatment.*

▲ *Gloves for working near sharp objects, and for handing lubricants or treatments.*

Handle Chemicals Properly

Agricultural chemicals can be dangerous. Improper use can seriously injure persons, animals, plants, soil and property.

▲ *Read and follow chemical supplier instructions.*

▲ *Wear protective clothing.*

▲ *Handle all chemicals with care.*

▲ *Agricultural chemicals can be dangerous. Improper use can seriously injure persons, animals, plants, soil and property.*

▲ *Inhaling smoke from any type of chemical fire is a serious health hazard.*

▲ *Store or dispose of unused chemicals as specified by the chemical manufacturer.*

▲ *If chemical is swallowed, carefully follow the chemical manufacturer's recommendations and consult with a doctor.*

▲ *If persons are exposed to a chemical in a way that could affect their health, consult a doctor immediately with the chemical label or container in hand. Any delay could cause serious illness or death.*

▲ *Dispose of empty chemical containers properly. By law rinsing of the used chemical container must be repeated three times. Puncture the container to prevent future use. An alternative is to jet-rinse or pressure rinse the container.*

▲ *Wash hands and face before eating after working with chemicals. Shower as soon as application is completed for the day.*

▲ *Apply only with acceptable wind conditions. Wind speed must be below 8 kph (5 mph). Make sure wind drift of chemicals will not affect any surrounding land, people or animals.*

▲ *Never wash out a hopper within 30m (100 feet) of any freshwater source or in a car wash.*

Confined Space

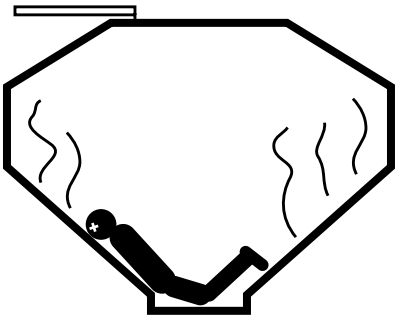

With materials loaded, or once used for hazardous fertilizers, or seeds with hazardous treatments, your fertilizer hopper may become a "*permit-required confined space*" under applicable statutes, regulations, insurance rules or business policy. The vent tube structure in the hopper has features to assist escape, and is not for routine entry.

- ▲ *A hopper that is full or merely appears full can be an entrapment hazard. You can sink entirely into the material, or into an oxygen-deficient void, and suffocate in a matter of seconds. Fertilizer bridges and crusts are especially dangerous.*
- ▲ *When hazardous fumes are present, you can be quickly overcome even with the hopper lid open.*
- ▲ *Do not enter a hopper for material loading, material unloading, hopper cleaning or meter maintenance.*
- ▲ *Clean hopper by power washing from outside hopper top.*
- ▲ *Perform meter maintenance by removing meter from bottom of empty hopper.*
- ▲ *If obstruction removal or repair requires hopper entry, have the work performed by a team trained in confined space procedures. See "**Hopper Entry**" on page 37.*

Practice Safe Maintenance

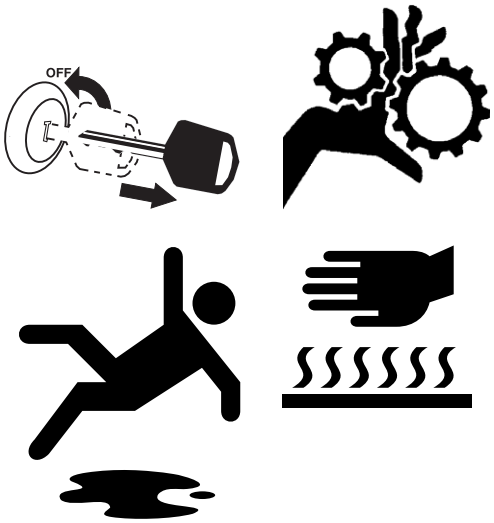

- ▲ *Understand procedure before doing work. Use proper tools and equipment. Refer to this manual for additional information.*
- ▲ *Work in a clean, dry area.*
- ▲ *Lower the planter, put tractor in park, turn off engine, and remove key before performing maintenance.*
- ▲ *Make sure all moving parts have stopped and all system pressure is relieved.*
- ▲ *Allow planter to cool completely.*
- ▲ *Disconnect battery ground cable (-) before servicing or adjusting electrical systems or before welding on planter.*
- ▲ *Inspect all parts. Make sure parts are in good condition and installed properly.*
- ▲ *Remove buildup of grease, oil or debris.*
- ▲ *Remove all tools and unused parts from planter before operation.*

Safety At All Times

Thoroughly read and understand the instructions in this manual before operation. Read all instructions noted on the safety decals.

▲ *Be familiar with all planter functions.*

▲ *Operate machinery from the driver's seat only.*

▲ *Do not leave planter unattended with tractor engine running.*

▲ *Do not stand between the tractor and planter during hitching.*

▲ *Keep hands, feet and clothing away from power-driven parts.*

▲ *Wear snug-fitting clothing to avoid entanglement with moving parts.*

▲ *Watch out for wires, trees, etc., when folding and raising planter. Make sure all persons are clear of working area.*

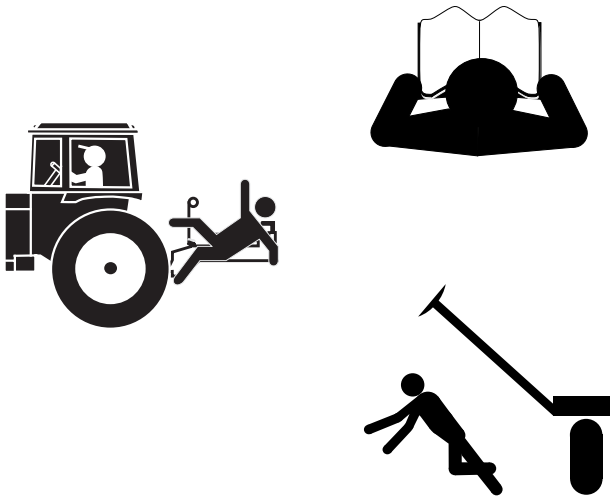

Safety Reflectors and Decals

Your YP2425F and YP4025F Dry Fertilizer/Seeder comes equipped with decals in place. They were designed to help you safely operate your implement.

▲ *Read and follow decal directions.*

▲ *Keep all safety decals clean and legible.*

▲ *Replace all damaged or missing decals. Order new decals from your Great Plains dealer. Refer to this section for proper decal placement.*

▲ *When ordering new parts or components, also request corresponding safety decals.*

To install new decals:

848-519C
Warning: Confined Space Hazard

On upper left facet of fertilizer hopper;
1 total

See page 12 and page 35 through page 37 for further information.

Safety Decals

1. Clean the area on which the decal is to be placed.
2. Peel backing from decal. Press firmly on surface, being careful not to cause air bubbles under decal.

Note: This page describes only the option decals. See your planter Operator manual for additional decals.

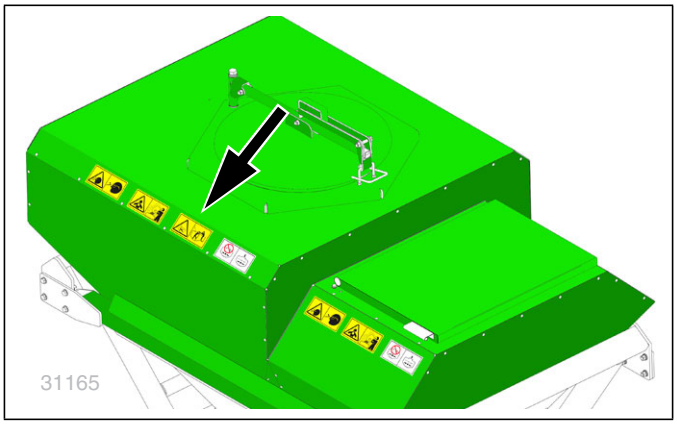

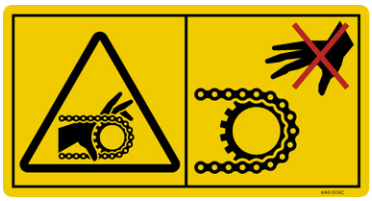

848-509C
Caution: Entanglement and Crushing
On left end of fertilizer air inlet manifold;
1 total

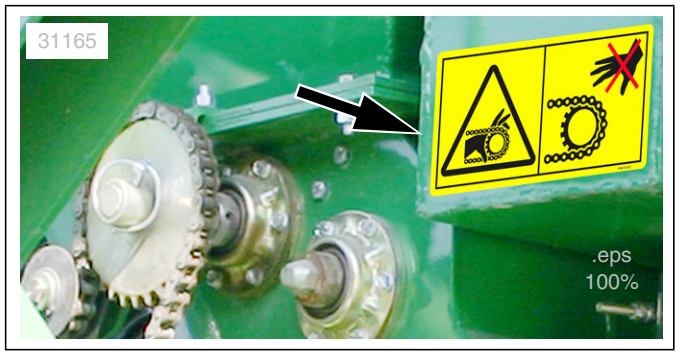

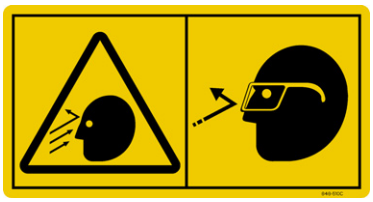

848-510C
Caution: Wear Eye Protection
On upper left facet of fertilizer and seed hoppers;
2 total

See page 11 for further information.

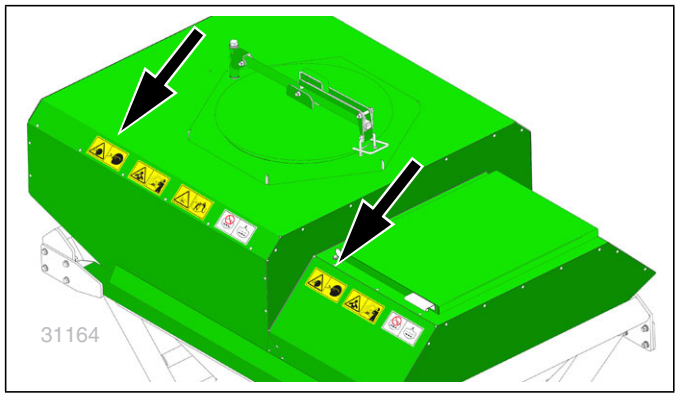

848-520C
Caution: Possible Chemical Hazard
On upper left facet of fertilizer and seed hoppers;
2 total

See page 11 for further information.

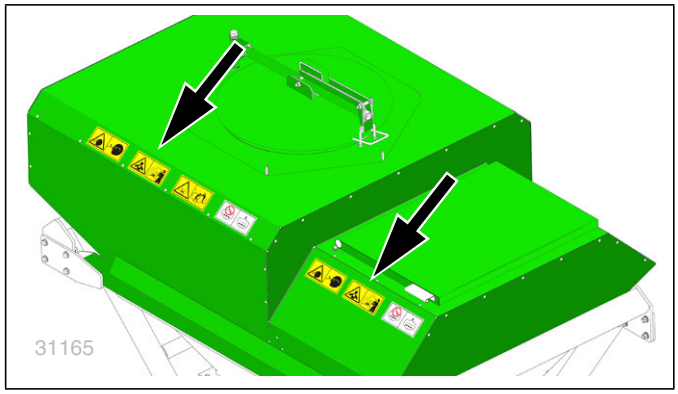

848-522C
Caution: Entanglement and Crushing
On right face of seed hopper near final range gears;
1 total

See page 23 for further information.

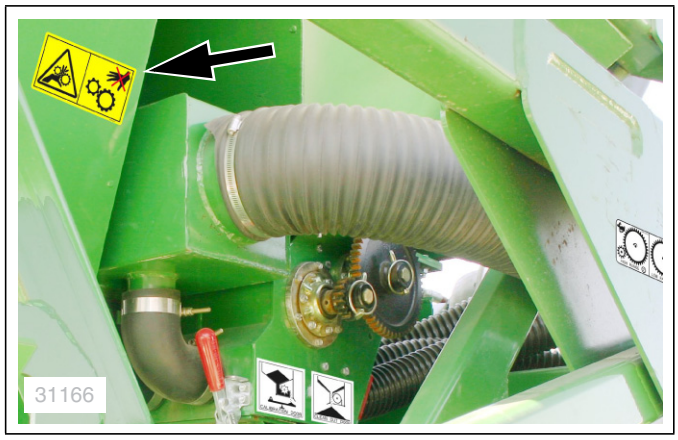

Introduction

This feature operator manual (403-362M) is a supplement to your planter Operator manual (401-406M: YP2425F) or (401-571M: YP4025F), and covers only the additional information required to setup, operate and maintain a YP24 or YP40 planter equipped with the dry fertilizer/seeder.

Your planter relies on these material rate references:

Pages 62 to 66	**Dry Fertilizer Rate** Only the fertilizer rates of this manual (403-362M) apply to the YP2425F-2470, YP4025F-1630 and YP4025F-1670. Use of the granular system for seeding is not recommended.
Manual 401-406B	**YP2425 Seed Rate** Only the seed rates of manual 401-406B usually apply to the YP2425F-2470. Fertilizer rates in manual 401-406B apply only if the YP24F is also equipped for liquid fertilizer application.
Manual 401-571B	**YP4025 Seed Rate** Only the seed rates of manual 401-571B usually apply to the YP4025-1670F or YP4025F-1630. Fertilizer rates in manual 401-571B apply only if the YP40F is also equipped for liquid fertilizer application.

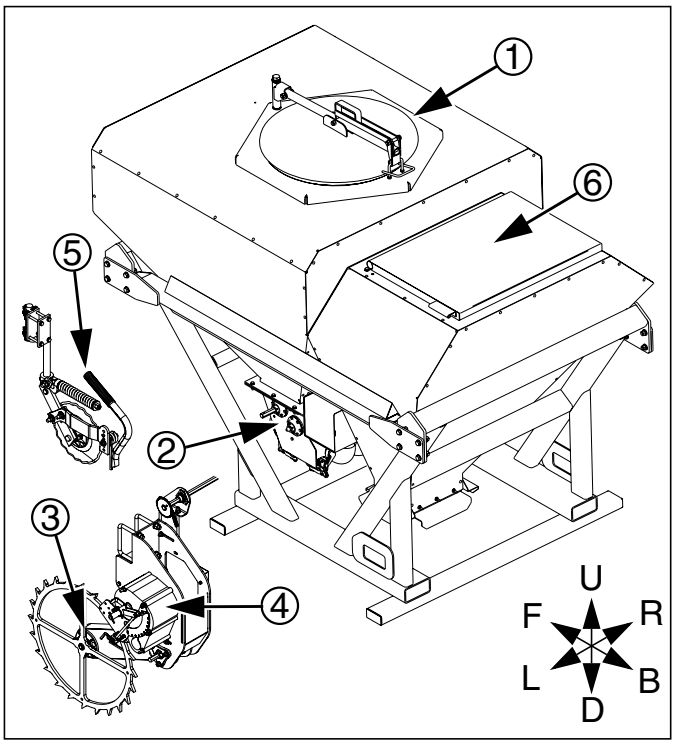

Figure 1 31088
YP2425 and YP4025 DF Seeder

Description of Unit

Refer to Figure 1

The YP2425F-2470, YP4025F-1630 and YP4025F-1670 Planter is a dry fertilizer/seeder version of the YP2425 or YP4025. The standard seed-only hopper or bulk-box capability is replaced by a dual-function hopper (one for the YP4025F and two for the YP2425F).

- The dry fertilizer function includes:
  ① a 1440 liter (41 bu) hopper compartment with
  ② integrated volumetric meter;
  ③ ground drive;
  ④ gear box; and,
  ⑤ frame-mounted fertilizer zone counters.

  Fertilizer is applied whenever the planter is lowered and in forward motion. Rate is controlled by range gears and a crank adjuster on the gearbox.
- The seeder function is a:
  ⑥ 670 liter (19 bu) compartment
  that delivers seed to the standard YP24/YP40 airbox and row unit seed meters (not shown).

  Seed rate is controlled by the standard DICKEY-john® IntelliAg® seed monitor and hydraulic meter drive.

Intended Usage

Use the YP2425F and YP4025F Dry Fertilizer/Seeder only to apply dry granular fertilizer and/or plant seeds compatible with Singulator Plus® or finger pickup meters. Do not modify the planter for use with attachments other than Great Plains options and accessories specified for use with the YP2425F-2470, YP4025F-1630 and YP4025F-1670.

Models Covered

This feature operator manual (403-362M) applies only to these specific planter models equipped with the dry fertilizer/seeder features:

YP2425F-2470 25-Series, Dry Fertilizer, 24-row, 70cm

YP4025F-1630 25-Series, Dry Fertilizer, 16-row, 30in

YP4025F-1670 25-Series, Dry Fertilizer, 16-row, 70cm

Document Family

403-362M	Feature Supplement Manual (this manual)
	YP2425F:
401-406M	Planter Operator Manual
401-406P	Planter Parts Manual
401-406B	Planter Seed Rate manual
	YP4025F:
401-571M	Planter Operator Manual
401-571P	Planter Parts Manual
401-571B	Planter Seed Rate manual
	DICKEY-john® manuals:
110011508	Seed Monitor Manual Level 1
110011501	Seed Monitor Manual Level 2 and 3

Using This Manual

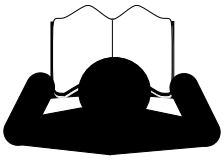

This manual will familiarize you with safety, assembly, operation, adjustments, troubleshooting, and maintenance. Read this manual and follow the recommendations to help ensure safe and efficient operation.

The information in this manual is current at printing. Some parts may change to assure top performance.

Definitions

The following terms are used throughout this manual.

NOTICE

A crucial point of information related to the preceding topic. Read and follow the directions to remain safe, avoid serious damage to equipment and ensure desired field results.

Note: Useful information related to the preceding topic.

Right-hand and left-hand as used in this manual are determined by facing the direction the machine will travel while in use unless otherwise stated. An orientation rose in some line art illustrations shows the directions of: Up, Back, Left, Down, Front, Right.

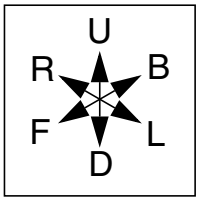

Preparation and Setup

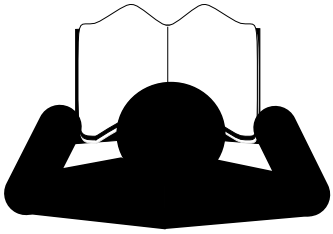

This section helps you prepare the dry fertilizer feature of your YP2425F-2470, YP4025F-1630 and YP4025F-1670 planter for use, and covers tasks that need to be done seasonally, or when the tractor/planter configuration changes.

Before using the planter in the field, you must hitch it to a suitable tractor, inspect systems and level the planter, per the instructions in the 401-406M (YP2425) or 401-571M (YP4025) Operator manual. Before using the planter for the first time, and periodically thereafter, certain adjustments and calibrations are required. See the Operator manual for these procedures.

Initial Setup

See the Operator manual, Appendix B, for pre-delivery and first-time setup items for the basic planter.

First-time/infrequent setup tasks for the YP24/YP40 DF/seeder feature include:

- Verify monitor setup (page 53 in this manual).

Post-Delivery/Seasonal Setup

On initial delivery, use with a new tractor, and seasonally, check and as necessary, complete these items before continuing to the routine setup items:

- Inspect fertilizer meter door seals for leaks or wear.
- Inspect fertilizer meter flutes for damage or wear.

Hitching and Leveling

The YP24/YP40 DF/seeder feature causes no changes to the hitching procedures described in the planter Operator manual.

Operating Instructions

This section covers general operating procedures. Experience, machine familiarity, and the following information will lead to efficient operation and good working habits. Always operate farm machinery with safety in mind.

Pre-Start Checklist

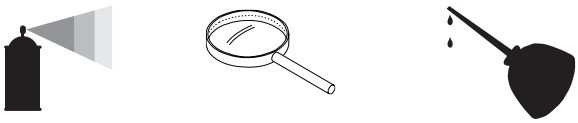

Perform the planter pre-start checklist, and the following steps before transporting the YP24/YP40 DF/seeder planter to the field. Add this item:

- ❑ Check for air system leaks at the fertilizer hopper lid, meter, inlet and outlet manifolds.

Planter Folding and Raising

The YP24/YP40 DF/seeder feature does not affect raising/lowering, folding/unfolding or tongue operations.

NOTICE

Material Loss Risk

The fertilizer ground drive operates whenever the planter is lowered and in forward motion. If fertilizer application is not desired (for example, during speed calibration or row unit adjustment testing), take any of these steps to prevent fertilizer metering:

- ▲ *Tie ground drive wheel up out of ground contact.*
- ▲ *Remove a chain in the ground drive.*
- ▲ *Set meter gearbox adjuster to zero. Do this only on a temporary basis, such as speed calibration.*
- ▲ *Defer loading of fertilizer until after speed calibration or other non-application lowered movement.*

Transport

DANGER

Loss of Control Hazard:
Ensure that the towing vehicle is adequate for the task. Using an inadequate tow vehicle is extremely unsafe, and can result in loss of control, serious injury and death.

The planter can weigh over 15 000 kg (33,500 pounds), depending on configuration and material load. The tractor unit MUST be rated for the load. If the tractor is not rated for at least 15 000 kg, calculate or obtain a scale weight of the planter.

Do not tow if planter exceeds the load rating of the vehicle.

CAUTION

Braking and Loss of Control Hazard:
Do not exceed 20 mph (32 kph).

NOTICE

Reduction of Control Risk:
Material loaded prior to travel increases stopping distance, and increases the need for caution in turns and braking.

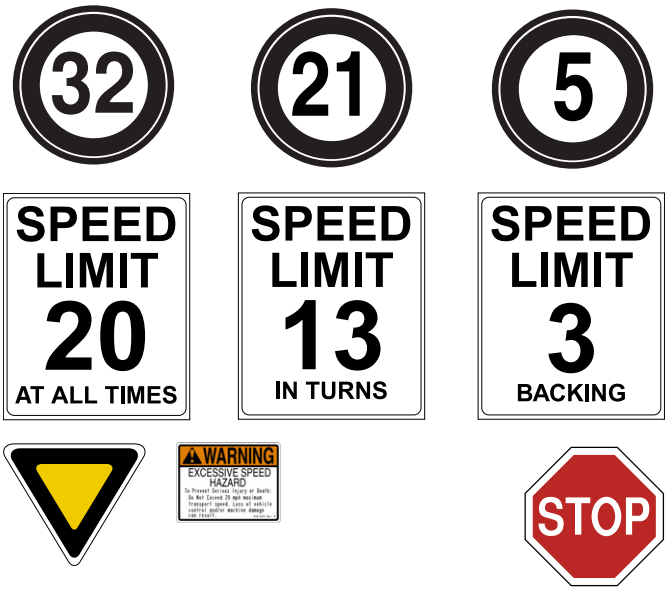

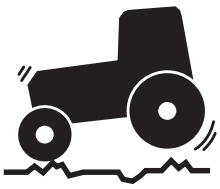

Typical YP2425F Weights

Configuration	YP2425-2470
Standard[1] Model, Empty	9200 kg
Std. Model, Full Hoppers	13000 kg
Maximum[2] Configuration, Full	13900 kg

[1] Includes: Markers and Frame-Mounted Coulters

[2] Adds: Unit-Mounted Coulters & Dual Row Cleaners

Typical YP4025F Weights

	YP4025F-	
Configuration	-1670	-1630
Standard[1] Model, Empty	12800 kg	28200 lbs
Std. Model, Full Hoppers	14700 kg	32300 lbs
Maximum[2] Configuration, Full	15200 kg	33500 lbs

[1] Includes: Markers and Frame-Mounted Coulters

[2] Adds: Unit-Mounted Coulters & Dual Row Cleaners

Other than considerations of planter weight, the YP2425F-2470, YP4025F-1630 and YP4025F-1670 requires no changes to transport compared to the standard YP24/YP40. See the 401-406M or 401-571M Operator manual for transport instructions.

Loading Materials

Seed and fertilizer may be loaded manually or via auger. Walkboard/ladder details, and auger height requirements are shown in the Operator manual. Before ascending the ladder for loading or auger outlet control:

- Check that the walkboard is closed and latched. Although the YP40F walkboard has a side extension, the latching is identical to the standard walkboard.
- Swing down and latch the lower ladder section.

Refer to Figure 2
(depicting the side railing closed, and rear railing open)
If loading via auger, the side and rear top railings may be swung down for clearance.

- Shut off hydraulic fan. Both hopper bins are pressurized when the fan is running.

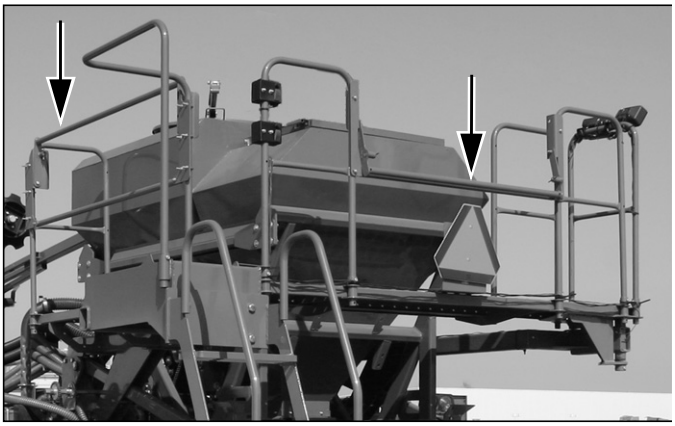

Figure 2
Walkboard Railings
31092

CAUTION

Blowing Debris and Possible Chemical Hazards:
Do not open hopper lids with fan running. Hopper contents may blow into your face, possibly causing eye injury, and exposing you to dust and possible chemical hazards.

Dust and Possible Chemical Hazards:
Seed may present a dust inhalation hazard. Treated seed may present a chemical exposure hazard. Wear eye protection. Wear a dust mask or respirator. Wear other protective equipment specified by the seed and treatment suppliers.

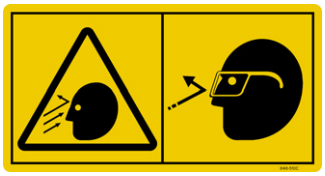

Loading Seed

The seed hopper is the smaller rear hopper.

1. Close the slide gate at the base of the seed hopper.

Refer to Figure 3

2. To open the lid, lift up on the handle ①. The handle is also a spring-loaded latch, and tilts up to release.
3. Inspect the hopper for leftover seed and debris. Clean out anything other than the seed to be planted. See "**Material Clean-Out**" on page 35
4. At first use, and seasonally, add seed lubricant to the empty hopper, and then add a seed/lubricant mix to the empty hopper per the Operator manual. Mix lubricant with remaining seed per Operator manual.
5. See Caution at right. Load seed and seed lubricant no higher than the top cap of the vent structure.
6. Close lid. Check that the latch snaps to horizontal and is holding lid closed.
7. Swing up and latch railing if lowered for auger operations.

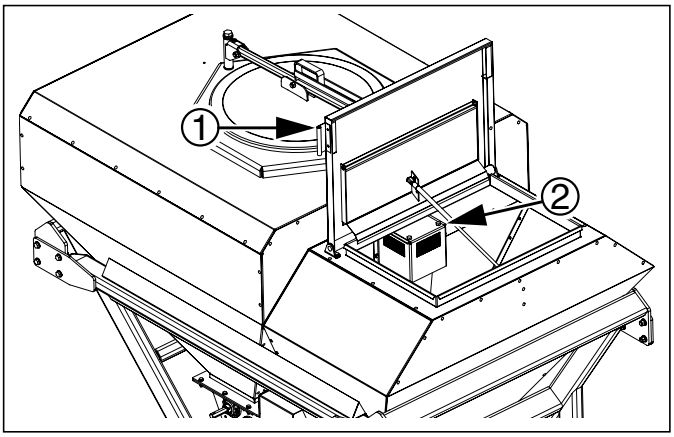

Figure 3
Seed Hopper Lid
31091

NOTICE

Sudden Lid Motion:
Open rear (seed) lid carefully. It is supported by a spring-loaded piston, and may swing up rapidly.

Loading Fertilizer

Check that calibration and clean-out doors are closed at meter (page 35).

Refer to Figure 4

1. Lift the handle ③ until the hook ④ releases from the U-bolt shackle ⑤.
2. Inspect the strainer basket ⑥ for debris. Remove and clean as necessary.

⚠ CAUTION

Confined Space Hazards:
*Leave strainer in place for all routine operations. Do not enter hopper for routine operations. Risk of entrapment and rapid suffocation. See "**Material Clean-Out**" on page 35 for further information.*

3. Inspect the hopper for leftover fertilizer and debris. Clean out anything other than the fertilizer to be applied. See "**Material Clean-Out**" on page 35.
4. Re-install strainer.
5. Inspect the seal under the lid. It must make air-tight seal against the hopper top plate ⑦ when the lid is closed and latched. Replace seal if crushed, worn or missing.
6. Load fertilizer through strainer.

⚠ CAUTION

Dust and Possible Chemical Hazards:
Dry fertilizer may present a dust inhalation hazard and may present a chemical exposure hazard. Wear eye protection. Wear a dust mask or respirator. Wear any other protective equipment specified by the material supplier.

7. Swing lid closed. Lift handle. Engage shackle with hook. Close handle.
8. Swing up and latch railing if lowered for auger operations.

Close lid handle for operations or short-term parking. For long-term storage, do not engage hook or latch handle, to avoid deforming the seal.

For storage, particularly unlatched, a padlock through both U-bolts deters unauthorized entry by persons unaware of possible confined space risks, and prevents entry of pests, debris and precipitation.

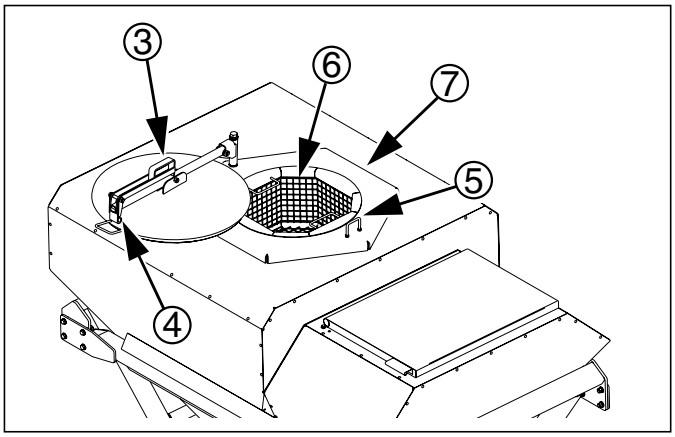

Figure 4 31090
Fertilizer Hopper Lid

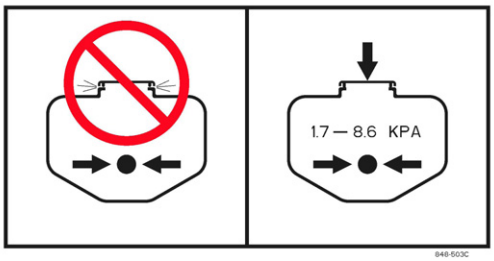

Changing Seed Box or Hopper

This topic in the Operator manual does not generally apply to the YP2425F-2470, YP4025F-1630 and YP4025F-1670. Using a standard 82bu hopper requires substantial disassembly of the planter seed cart structure, and modifications to the air system. Using a 150bu hopper or dual 200 gallon liquid fertilizer system further requires removal of the entire fertilizer ground drive. Such conversions are not documented or recommended.

Air Systems Operation

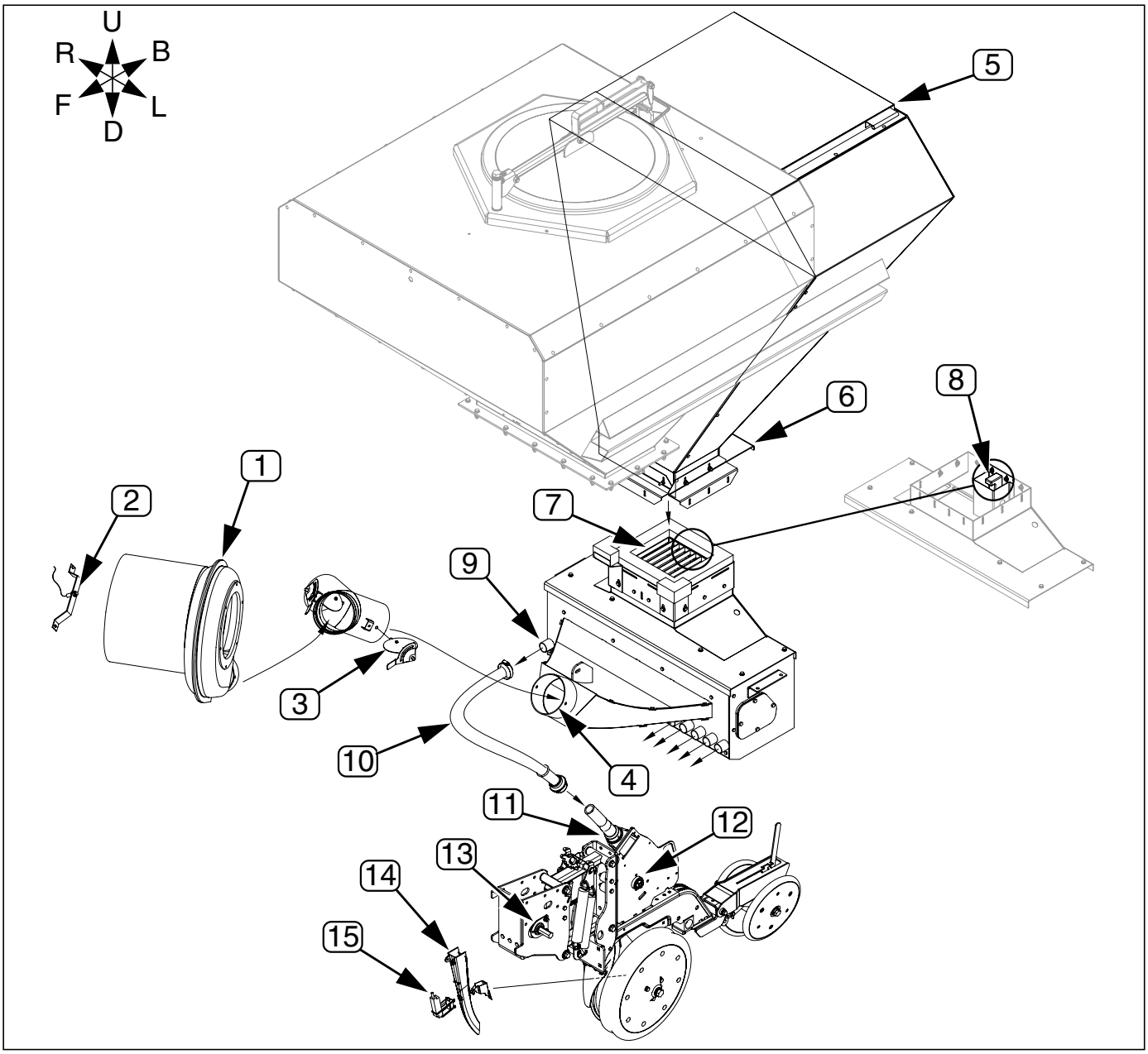

Figure 5
Planter Air System for Seed Metering

31094

Seeding System Elements (Excluding Drive)		
1 Hydraulic Fan	6 Slide Gate	11 Meter Inlet Vent
2 Fan RPM Sensor	7 Air Box Seed Inlet	12 Seed Meter
3 Butterfly Valve (Seed Leg)	8 Seed Level Sensor	13 Meter Drive
4 Manifold Air Inlet	9 Air Box Manifold Outlet	14 Seed Tube
5 Seed Hopper	10 Seed Delivery Hose	15 Seed Sensor

Seeding System Overview

Refer to Figure 5 on page 14

1. Hydraulic Fan:
   The hydraulic fan supplies air for both seed and fertilizer delivery. Fan rpm is operator-adjusted via the tractor circuit's hydraulic flow control.
2. Fan RPM Sensor:
   Fan rpm is measured by a sensor mounted inside the fan cage, and reported on the seed monitor console.
3. Butterfly Valve (Seed Leg):
   Manually-adjusted butterfly valves are provided on the splitter at the fan outlet. The valve on the left leg controls air for the seeding system. See page 19 for valve adjustment.
4. Air Box Air Inlet:
   Fan air enters the air box at the manifold inlet and is mixed with seed.
5. Seed Hopper:
   The rear hopper is the seed hopper. See "**Loading Seed**" on page 11. The hopper contains a pressure-balancing system (not shown) to help prevent seed bridging.
6. Slide Gate:
   There is a slide gate at the base of the seed hopper, used to shut off seed flow during transport, maintenance and storage.
7. Air Box Seed Inlet:
   Seed enters the air box manifold at the top.
8. Seed Level Sensor:
   The inlet contains a level sensor. When this sensor is exposed (seed level below sensor), there may be less than a hectare of seed remaining.
9. Seed Manifold Outlets:
   The fan airflow entrains seed inside the air box, and exits at the manifold outlets. On this model planter, there is one outlet port per row.
10. Seed Hoses:
    Seed hoses deliver seed to the rows. On this model planter, there is one hose per row, and no Y-tube splitters.
11. Air Release Vents:
    The meter inlets contain a venting system to exhaust the delivery air. When seed backs up above the vent, seed flow to that row stops until the meter has consumed enough seed to re-expose the vent.
12. Seed Meter:
    The Singulator Plus® or finger pickup meter contains a seed wheel or finger-set that capture seeds at a precise rate.
13. Seed Meter Drive:
    Meter rotation is coupled to the drive system, which is powered by a hydraulic motor (not shown) under control of the seed monitor. Clutches control drive shafts for entire planter sections. See planter Operator manual for clutch operation.

Note: Seeding rate is independent of air system operation, if the air system is set to provide enough bulk seed flow to keep the meters full, but not so much flow that system plugging occurs. See page 19 for fan operation.

Note: A coupler at the meter may be disengaged to shut off seeding at that row. See planter Operator manual for row shut off. Fertilizer application cannot be shut off at individual rows.

14. Seed Tube:
    The seed wheel or finger set deposits seed in the row's seed tube, for delivery to the furrow.
15. Seed Sensor:
    In the seed tube, the seed sensor detects passage of seeds. Medium size and large seeds are counted individually. With smaller seeds, most are detected, allowing the monitor to detect stoppages.

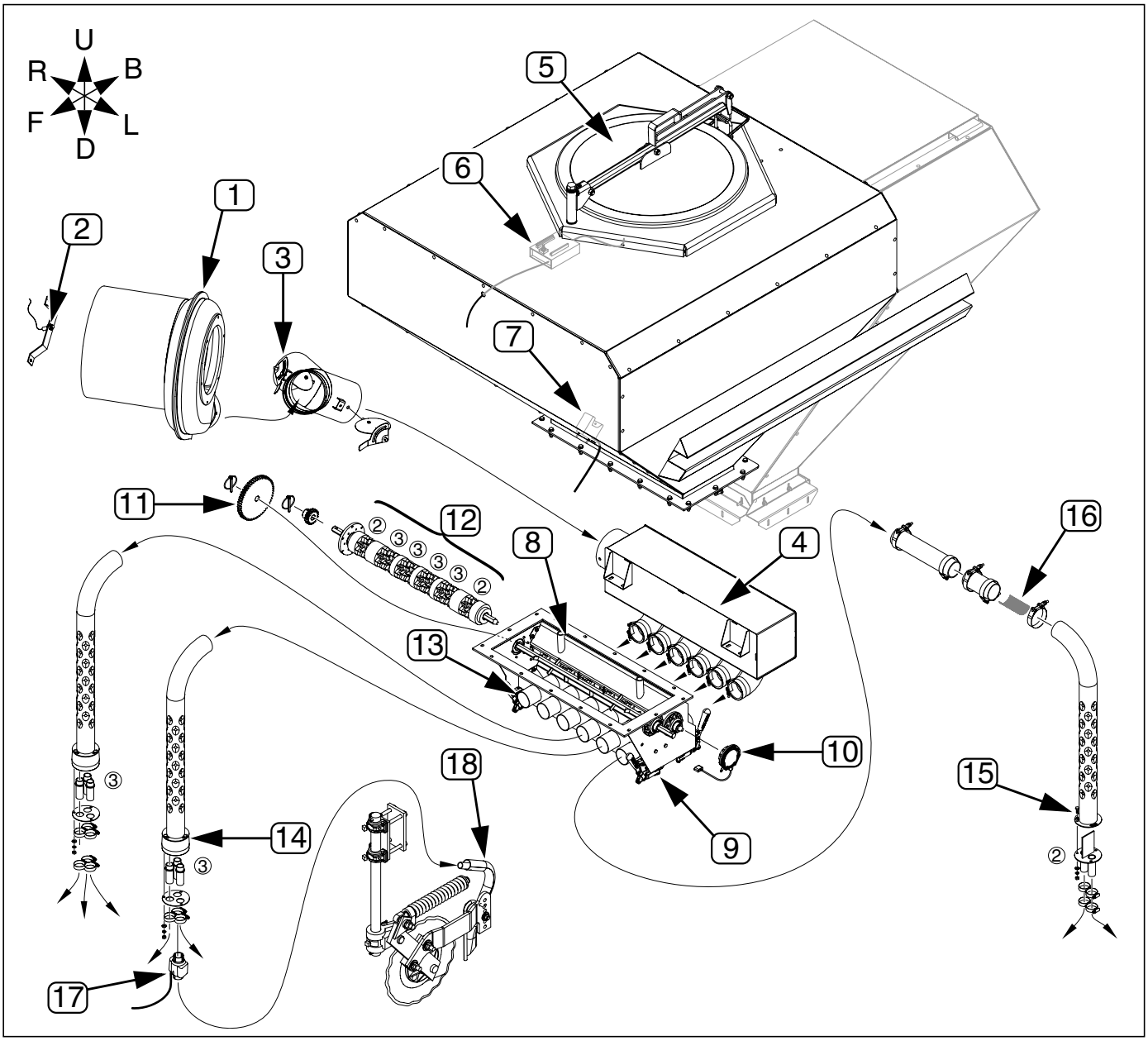

Figure 6
Planter Air System for Fertilizer Metering

Fertilizer System Elements (Excluding Drive)		
1 Hydraulic Fan	7 Level Sensor	13 Manifold Outlets and Hoses
2 Fan RPM Sensor	8 Fertilizer Meter	14 3-Way Tower
3 Butterfly Valve (Fertilizer Leg)	9 Calibration/Clean-Out Doors	15 2-Way Tower
4 Air Inlet Manifold	10 Meter Shaft RPM Sensor	16 2-Way Air Vent
5 Seed Hopper	12 Flute Stars	17 Blockage Detector
6 Pressure Sensor	11 Range Gears	18 Coulter Applicator

Fertilizer System Overview

Refer to Figure 6 on page 16

1. Hydraulic Fan:
   The fan supplies air for both fertilizer and seed delivery. Fan rpm is operator-adjusted via the tractor circuit's hydraulic flow control.
2. Fan RPM Sensor:
   Fan rpm is measured by a sensor mounted inside the fan cage, and reported on the seed monitor console.
3. Butterfly Valve (Fertilizer Leg):
   Manually-adjusted butterfly valves are provided on the splitter at the fan outlet. The valve on the right leg controls air for the fertilizer system. See page 19 for valve adjustment.
4. Fertilizer Air Inlet Manifold:
   Fan air is divided into six equal flows at the inlet manifold.
5. Fertilizer Hopper:
   The front hopper is the fertilizer hopper. See "**Loading Fertilizer**" on page 12. The hopper contains a ladder-style pressure-balancing system (not shown) to help prevent fertilizer bridging.
6. Pressure Sensor:
   A sensor in the fertilizer hopper reports air pressure to the seed monitor, and is reported on the console.
7. Fertilizer Level Sensor:
   The fertilizer hopper contains a level sensor. When this sensor is exposed (fertilizer level below sensor), approximately 78 liters (2.2 bu) of fertilizer remains.
8. Fertilizer Meter:
   The fertilizer meter is at base of the fertilizer hopper. There is no slide gate. The meter is always open to the fertilizer hopper.
9. Meter Doors:
   The meter box has doors at the bottom for clean-out (front) and calibration (rear). See page 27 or page 35. These doors are closed for field operations.
10. Fertilizer RPM Sensor (shaft monitor):
    A sensor on the meter flute shaft reports shaft rate to the seed monitor. The seed monitor does not report material rate from this data, but can generate alarms on shaft stoppages or rpm out-of-limits.
11. Range Gears:
    Interchangeable Final Range Gears set the coarse rate of the flute shaft. The meter system is powered by a ground drive (not shown), which has a variable rate gearbox for fine adjustment. See page 23.
    Fertilizer metering occurs whenever the planter is lowered and in forward motion.
12. Flute Stars:
    Fertilizer is metered into the manifold air stream by flutes on the final shaft. The four inside compartments have three flutes (six halves) and feed 3-way towers. The two outside compartments have two flutes and feed 2-way towers.

    NOTICE

    Material Mis-Application Risk:
    If it is ever necessary to disconnect delivery hoses at the manifold, it is essential that the hoses to the wing-end (2-way) towers be connected to the outside ports (#1 and #6) at the manifold.

13. Fertilizer Manifold Outlets:
    The fan airflow from the inlet manifold entrains metered fertilizer in the chambers below the flutes, and exits at the manifold outlets. Each outlet serves a single hose to a single distribution tower, and multiple rows.

    The center four outlets serve 3-way towers.
    The outside two outlets serve 2-way towers.
14. 3-way Tower:
    Four of the six towers divide the air/fertilizer flow 3 ways.
15. 2-Way Tower:
    Two of the six towers (the two serving wing end rows) divide the air/fertilizer flow 2 ways.
16. Vent for 2-Way Towers:
    To balance the airflow at all manifold ports, the 2-way towers vent some of the air at the tower inlet. See page 43 for maintenance.
17. Blockage Detectors:
    Each tower divider outlet is equipped with a material sensor, connected to the seed monitor and configured for "Blockage" mode. These report any flow failure at the rows. See page 54.
18. Coulter Applicators:
    Coulters are factory configured for side-dress fertilizer application, at 5cm (2in) off-row, and a depth of 5cm (2in), "zone" application. The coulter has adjustments for depth and the height of the applicator exit tube.

Fan Circuit Operation

Refer to Figure 7

Three hydraulic hoses serve the fan, and must be properly connected for the fan to operate in the correct direction ①, at recommended speeds, and without damage. See "**Hydraulic Hose Hookup**" in the 401-406M (YP24) or 401-571M (YP40) Operator manual.

1. Always connect the case drain line ② first.

   This line protects the outer shaft seal of the hydraulic motor. The case drain is a small line to the hitch, provisioned with a specialized low-seep flat-face case drain Quick Disconnect. Pressure spikes during motor operation, and pressure cycles due to temperature change are bled off by the case drain.

NOTICE

Motor Seal Damage Hazard

Do not apply pressure to the case drain line. Do not change the special QD connector. A restricted or sealed case drain line will promptly result in motor seal damage.

2. Connect the motor return line ③ second, to sump.

   The planter includes a $1\frac{1}{16}$in low back-pressure QD coupler set. Install the receptacle on a tractor sump port, and not at a normal remote return port. The unusual size aids in ensuring correct connection, so that the motor return line handles high volume at low back-pressure, ensuring full motor performance.

3. Connect the motor inlet line ④ to a tractor remote capable of 95 liters per minute (25 gpm). If a priority remote is available, use it for the fan.

4. The fan hydraulic circuit includes a check valve ⑤, which provides a relief path for oil at motor shutoff. If the fan is connected in reverse, flow through this valve results in low fan rpm, providing strong indication reversed connection.

   Correct fan direction is shown at ①. If reversed fan is suspected, observe it during shutoff, as the direction of motion is easier to see at lower rpms as it slows to a stop (initial startup is virtually instantaneous, making observation at start difficult).

Fan speed is controlled by the tractor circuit and butterfly valves (and not the seed monitor).

You may stop the fan by setting the circuit to neutral or float. The check valve slows the blades to a stop by locally recirculating the oil.

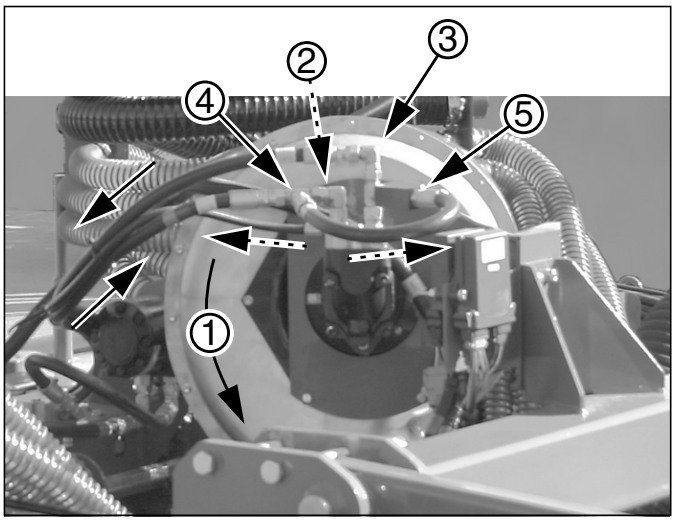

Figure 7
Hydraulics at Fan

31095

If the fan is connected in reverse, it may not run at all (due to no oil source at the return connection). If oil is present, oil bypass at the check valve ⑤ prevents the fan from reaching high rpm. A reversed fan may send some air to the delivery systems, but is incapable of providing reliable air flow for planting.

Fan speed can change as oil heats to operating temperature. Re-check fan rpm and hopper pressure more often during early operations.

Fan General Operating Information

Adjust the fan rpm and butterfly valves to provide sufficient air flow for consistent transport of seed and dry fertilizer. Suggested values are shown at right.

Fan rpm is controlled by the tractor circuit, and reported by the seed monitor. Always start the fan with a low flow setting. Gradually bring fan up to the target rpm.

Fan air pressure is measured by a sensor in the fertilizer hopper, and reported by the seed monitor. Air pressure is controlled by fan rpm, butterfly valve settings, material density and rates. System settings may vary with material mix, material density and rates.

Recommend initial butterfly valve setting is 0° (wide open) at both valves (assuming material application from both hoppers). If one hopper is unused, set the valve for that hopper to 30° to simulate the normal back-pressure of material flow from that hopper.

Butterfly Valves

Use tractor remote hydraulic valve flow control to set fan speed and butterfly valves to balance flow. Precise technique depends on tractor capabilities:

- For any setup adjustment, operate the tractor engine at typical field rpms, and not at idle.
- Preset the butterfly valves. Use any settings that you previously developed for the material mix and rates, otherwise:

  If the tractor has fine control of remote flow rates, and consistent flow at varying tractor engine rpm, initially set the butterfly valves to 0°.

  If the tractor has only coarse control of flow, initially set the butterfly valves to 45°.
- Set the fan circuit flow to bring the pressure sensor to near the recommended value.
- If the tractor has marginal flow available, or the list circuit has priority, you may need to experiment with combinations of fan flow and butterfly valve settings.

At excessive rpm, too much air flow can cause:

Symptoms of Insufficient Air Flow

- Excessive skips (low seed population) at seed meters.
- Blockage reported at fertilizer applicators.
- Plugging of delivery hoses at low spots.

Symptoms of Excessive Air Flow

- Blockage reported at openers or coulters.
- Plugging of delivery hoses near air boxes.
- oil heating
- slow lift times

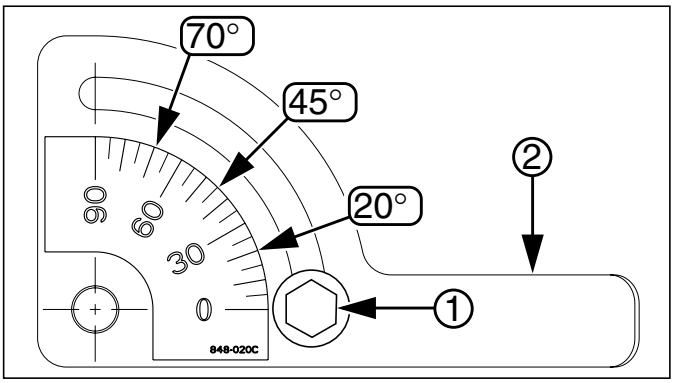

Figure 8
Fan Butterfly Valve Handle

25137

Butterfly Valve Operation:

To adjust, loosen bolt ① and rotate the handle ②. Re-tighten bolt.

0° is wide open - maximum air flow.
90° is closed - minimum air flow.

The valve provides the most effect at settings between 20° and 70°.

Starting at 30° reduces the fan workload.
Starting at 45° provides the most adjustment range up or

Note: If desired pressure cannot be reached, or requires unusually high oil flow at low butterfly valve settings, chances are the fan is running backwards. Reverse the inlet/return lines at the hitch.

Monitor Operation

The YP2425F-2470, YP4025F-1630 and YP4025F-1670 includes the standard DICKEY-john® IntelliAg® monitor, operating in Planter/Drill Control mode. There are setup differences vs. other YP40 planters, generally:

- Row delivery tubes are equipped with blockage sensors. These rows are treated as “seed” rows numbered from

YP24	YP40
25 (actual seed row 1) to 48 (actual seed row 24)	17 (actual seed row 1) to 32 (actual seed row 16)

- Seed tubes are monitored in Population mode. Fertilizer applicators are monitored in Blockage mode.

  Note: Fertilizer is not set up as a separate Material or Channel. The monitor’s “GRAN FERT” air drill mode is not used. The seed monitor is not engaged for fertilizer calibration, and no “CAL CONST” is required.

- There are two hopper level sensors in use:
  1. Seed air box
  2. Fertilizer hopper level

  Note: There is no optional level sensor for the seed hopper.

- There is one air pressure sensor in use, installed in the fertilizer hopper.
- There is a second[a] rpm sensor, installed on the left end of the fertilizer meter shaft. Although the seed monitor can report the rpm, the main use is as a shaft monitor.

  Set upper and lower rpm limits based on the fertilizer rate chart, and your planned field speed. The chart shows expected meter rpm for various gearbox settings, in High and Low range, at 9.7 kph (6 mph). If using a different field speed, adjust the expected rpm proportionately.

Marker Operation

The YP24/YP40 DF/seeder feature does not affect marker operations.

a. The first rpm sensor is on the hydraulic motor for the seed meters.

Field Set-Up Checklists

Add the following items to the basic planter checklists, or any customer checklist you have developed.

Mechanical Checklist (Hitching)	Page
☑ No changes	

Electrical Checklist	Page
☑ No changes	

Hydraulic System Checklist	Page
☑ No changes	

Mechanical Checklist (post-Hitching)	Page
☑ No changes	

Planter Meter Drive Checklist	Page
☐ Check fertilizer ground drive and gearbox output chain lubrication and slack	39
☐ Check final Range gears set for desired High or Low range	23
☐ Check setting of variable rate gear box against chart or calibrated rate.	24
☑ No changes for seeding	

Air System Checklist	Page
☐ Fan butterfly valves set for fertilizer	19
☐ Fertilizer loaded. Lid closed.	12
☐ No air leaks in fertilizer system	
☐ Hoses and tubing - no sags, no pinches	
☐ Hoses fully connected to applicators	

Row Units Checklist	Page
☐ Check frame-mounted coulter: offset angle depth	29
☐ Check applicator height.	29

Field Operation

The YP24 DF/seeder feature requires no changes to the checklists in the 401-406M Operator manual, the YP40 DF/seeder requires no changes to the checklists in the 401-571M Operator manual.

When the fan is running, and the planter is lowered and in forward motion, material is applied from the fertilizer hopper at the currently set rate.

Consult seed monitor for blockage alarms.

When reloading fertilizer, check consumption against anticipated use to that point.

Short-Term Parking

The YP24 or YP40 DF/seeder feature requires no changes to the Parking steps in the 401-406M or 401-571M Operator manual.

Long-Term Storage

The YP24 or YP40 DF/seeder feature adds the following steps to the storage recommendations of the 401-406M or 401-571M Operator manual:

- Perform a seeding system clean-out (page 35)
- Close the lid of the seed hopper firmly, making sure it is fully latched (page 11).
- Clean-out the fertilizer air system and hopper (page 35).
- Tie the clean-out and calibration doors partly open (page 35).
- Close, but do not tightly seal the fertilizer hopper lid (page 12).

NOTICE

Equipment Damage Risk:
*Perform a fertilizer clean-out when the planter is left unused for more than 36 hours. Fertilizer is generally very corrosive. If fertilizer or residue is allowed to remain in the hopper or meter, exposed metal surfaces will be attacked. See "**Material Clean-Out**" on page 35.*

Adjustments

This table provides a cross-reference to all adjustment items unique to the YP2425F-2470, YP4025F-1630 and YP4025F-1670 planter.

For adjustments not listed, see the 401-406M (YP24) or 401-571M (YP40) Operator manual.

Adjustment	Page	The Adjustment Affects
Air Systems	14	
Fan Speed	19	Optimal seed distribution
Butterfly Valve (Seed Leg)	19	Consistent seed flow and disk singulation
Butterfly Valve (Fertilizer Leg)	19	
Material Rates		
Seed Rate	401-406B	(Same as for standard YP24 planters. Refer to that Seed Rate manual.)
Seed Rate	401-571B	(Same as for standard YP40 planters. Refer to that Seed Rate manual.)
Fertilizer Rate	62	
Monitor Adjustments		
Alarms	20	
Restore factory settings	53	
Frame-Mounted Coulter Adjustments		
Coulter Depth	29	
Applicator Depth	29	

Setting Material Rates

Setting Seed Rate

Seed rate setting for the YP2425F-2470, YP4025F-1630 and YP4025F-1670 planter is identical to the standard YP24 or YP40 planter. Refer to the Operator and Seed Rate manuals for details:

YP2425F-2470	401-406M Operator manual 401-406B Seed Rate manual
YP4025F-1630 or YP4025F-1670	401-571M Operator manual 401-571B Seed Rate manual

Setting Dry Fertilizer Rate

There are three steps to obtaining the target fertilizer kilograms per hectare (or pounds per acre):

1. *Set Final Drive Range on fertilizer meter (below)*
2. *Set Variable Rate Gearbox* (page 24)
3. *Calibr*ate (page 25).

Seed Meter Final Drive Range

Refer to Figure 9

The meter flute shaft ① is driven by the agitator shaft ② through a pair of interchangeable gears ③, ④. The positioning of these gears creates two final drive ranges.

The rate chart has two page columns, each based on a specific Final Drive Range. The Ranges are:

- *"High"* range, which is used for higher fertilizer rates
- *"Low"* range, which is used for lower fertilizer rates

The two meter shafts are labeled "DRIVING" and "DRIVEN".
The "DRIVING" shaft is the upper shaft.
The "DRIVEN" shaft is the lower shaft.

Refer to the Fertilizer Rate chart (page 63), the table at right, and Figure 9 for setting the meter final drive range.

1. Remove the lynch pins from the ends of both shafts.
2. Remove and position the gears as shown in the table above.
3. Secure with lynch pins.

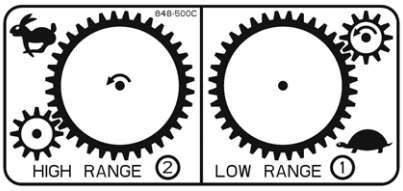

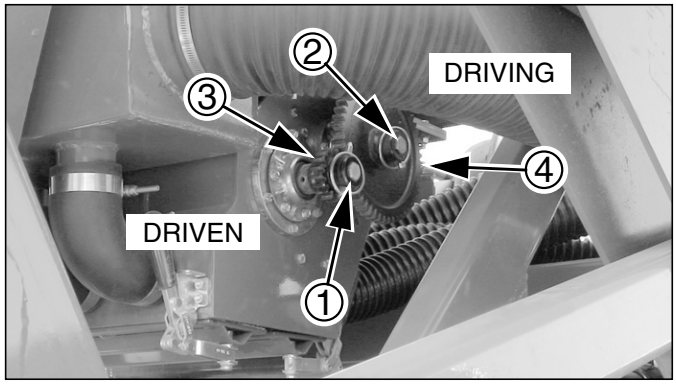

Figure 9 91097
High Final Drive Range

FINAL DRIVE RANGE	DRIVING	DRIVEN
LOW RANGE	17 Tooth Small	54 Tooth Large
HIGH RANGE	54 Tooth Large	17 Tooth Small

Setting Variable Rate Gearbox

The variable rate gearbox allows an infinitely variable meter drive speed to attain a wide range of application rates. The ratio of gearbox input speed to output speed is controlled by the position of a gearbox control arm. The control arm has an indicator that points to a scale marked in degrees. The Fertilizer Rate chart shows the rate for each five degrees of arm rotation.

Refer to the rate chart and set the variable rate gearbox control arm to its scale setting for the target fertilizer rate

To adjust the Variable Rate Gearbox:

Refer to Figure 10

1. Remove the hairpin cotter ① securing the gearbox adjustment crank ②.
2. Rotate crank ② until the control arm indicator ③ points to the scale setting that matches the rate from the rate chart or as determined by calibration.
3. Reinsert the hairpin cotter.

Note: The variable rate gearbox operates optimally between 30 and 70. If the target fertilizer rate appears on both the Low and High Range charts, the most consistent results are obtained when the gearbox control arm is set between 30 and 70. Settings below 20 degrees are not recommended. When the control arm is set above 70 degrees, large movements of the arm result in small changes in seeding rate.

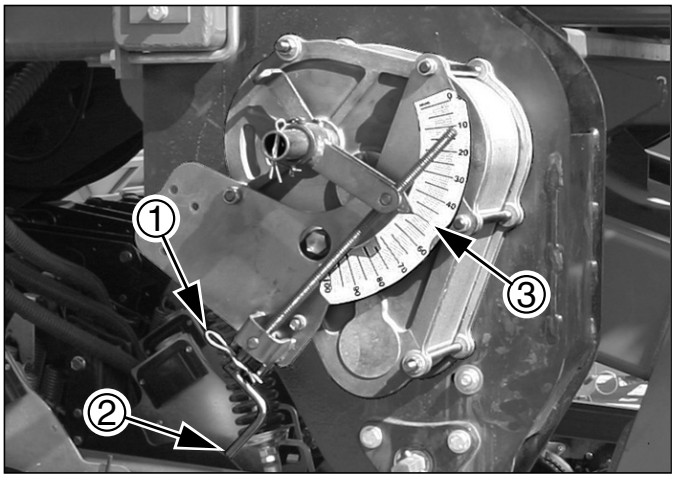

Figure 10
Variable Rate Gearbox

31099

Meter Calibration

The fertilizer rate charts are based on a representative 11-52-0 dry granular fertilizer. Many factors affect meter rates including fertilizer density, granularity, texture, adhesion, humidity and field conditions.

Great Plains recommends calibrating for the exact material being applied. Calibration determines the kg/ha (or lbs/ac) of the meter at the current variable rate gearbox setting for your particular fertilizer.

Calibration Procedure

Calibration consists of:

- metering material for a simulated distance (area), by manually cranking the ground drive system,
- measuring the sample weight generated, computing the rate, and, if not the rate desired,
- adjusting the gearbox setting to produce a rate closer to the target rate, then;
- re-sampling to verify the adjustment.

There are two ways to collect the sample:

a. Fan On / Row Sample (page 26)
Place collection containers under each fertilizer row applicator (calibration door closed).

b. Fan Off / Meter Sample (page 27)
Place a tarp under the fertilizer meter with the calibration door open.

Either method relies on manual operation of the fertilizer ground drive system and meter. You may operate the drive by turning the ground drive wheel itself, or use the supplied 403-414H crank to turn the jackshaft at the ground drive arm pivot.

Initial Calibration Steps

1. Set the final gear Range and variable rate gearbox adjuster (from the charts on page 64 or 65, or previous calibrations of similar material).
2. Hitch planter to tractor capable of operating the planter. (See 401-406M or 401-571M Operator manual.)
3. Close the slide gate on the seed hopper (page 14).
4. Raise the planter. Install transport locks. (See 401-406M or 401-571M Operator manual.)
5. Load enough fertilizer for at least $^{1}/_{10}$ hectare (or $^{1}/_{10}$ acre) plus an extra 35 to 45 kg (75 to 100 lbs) (page 12).

Refer to Figure 11

6. Attach the 403-414H calibration crank ① to the left end of the fertilizer ground drive arm pivot. You can use the hairpin cotter ② from the gearbox adjuster crank to secure the calibration crank to the shaft.

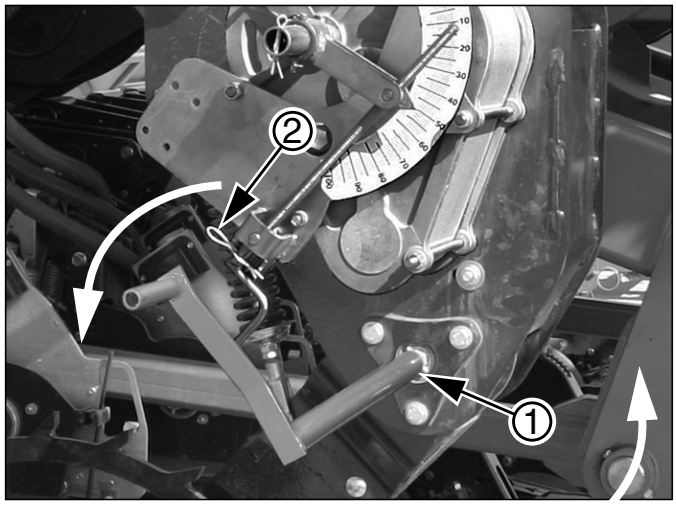

Figure 11
Calibration Cranking
31000

NOTICE

Sampling Error Risk:
Do not leave fertilizer hopper lid open. Low pressure above fertilizer skews results. Perform calibration with lid tightly closed, as for normal field operations.

Revolutions for Sample Size

Sample Size	Revolutions of: Crank	Revolutions of: Wheel
1/10th Hectare	4.52	5.24
1/10th Acre	11.16	12.95
1 Hectare	45.2	52.4
1 Acre	111.6	129.5

31104

Note: A cranking speed of 1 revolution per second (60 rpm) simulates a field speed of 9 kph.

Note: For a more accurate calibration, crank for a full hectare or acre. Make sure there is enough material in the hopper.

NOTICE

Material Rate Risk:
Check consumption rates in the field. One variable factor that calibration cannot compensate for is the effective rolling radius of the ground wheel in unusually soft or hard ground.

Row Sample Calibration

This method requires 16 or 24 containers each with a capacity of about 1% of a hectare or acre, and a scale capable of precisely weighing the heaviest empty container plus the sample size (or all the containers at once).

7. Turn on the seed monitor system. Although not used for calibration, you need the monitor to display fan rpm.
8. Weigh the empty sample containers (the “tare”).

Refer to Figure 12

9. Place the collection containers under each coulter applicator.

Refer to Figure 13

10. Start the hydraulic fan. Adjust the rpm to normal field values.

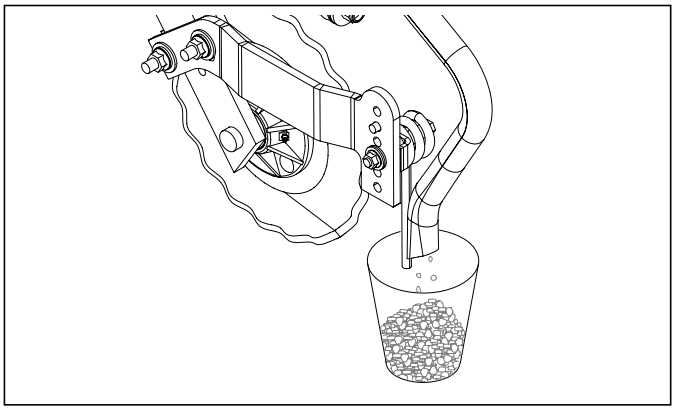

Figure 12
Row Sample Collection
31102

NOTICE

Machine Damage Risk:
Do NOT turn the crank clockwise, or the gearbox may be damaged. Turn the crank only counter-clockwise (as seen from planter left, facing planter right).

11. Turn the crank counter-clockwise until material is consistently appearing in the collection containers. Stop cranking.
12. Empty the collection containers.
13. Turn the crank for the number of revolutions necessary to simulate the area to sample, as shown in chart on page 25.
14. Calculate the material rate per the instructions and examples on page 28.
15. If the results differ from your target by more than a few percent, adjust the gearbox setting per the instructions on page 28.

    Then measure another sample starting at step 13.

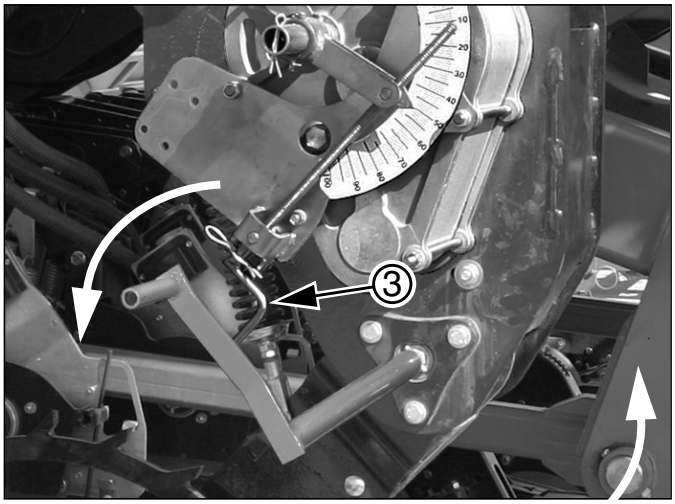

Figure 13
Calibration Crank (Row)
31000

Row Sample Close-Out

16. Pin the gearbox adjuster ③ in position
17. Remove the calibration crank.

Meter Sample Calibration

18. Weigh any container(s) required to hold the sample on the scale.

Refer to Figure 14

19. Place a tarp under the fertilizer meter. Support the corners or edges so that no material can spill.

Refer to Figure 15

20. Open the meter calibration door. The calibration door is the rear door, furthest from the DRIVING gear.

NOTICE

Material Loss Risk:
Do not open the (forward) door under the DRIVING gear. This is the clean-out door. Opening this door drains the hopper. Once the clean-out door is open it is difficult to stop seed flow until the hopper is empty.

21. Wipe all material off the flanges around the meter door.

NOTICE

Machine Damage Risk:
Do NOT turn the crank clockwise, or the gearbox may be damaged. Turn the crank only counter-clockwise (as seen from planter left, facing planter right).

Refer to Figure 16

22. Turn the crank counter-clockwise until material is consistently appearing in the collection containers. Stop cranking.
23. Empty the tarp and return it to the collection position.
24. Turn the crank for the number of revolutions necessary to simulate the area to sample, as shown in chart on page 25.
25. Weigh the collected sample. Subtract the weight of any container required at the scale.
26. Calculate the material rate per the instructions and examples on page 28.
27. If the results differ from your target by more than a few percent, adjust the gearbox setting per the instructions on page 27.

    Then measure another sample starting at step 23.

Meter Sample Close-Out

28. Pin the gearbox adjuster ③ in position
29. Remove the calibration crank.

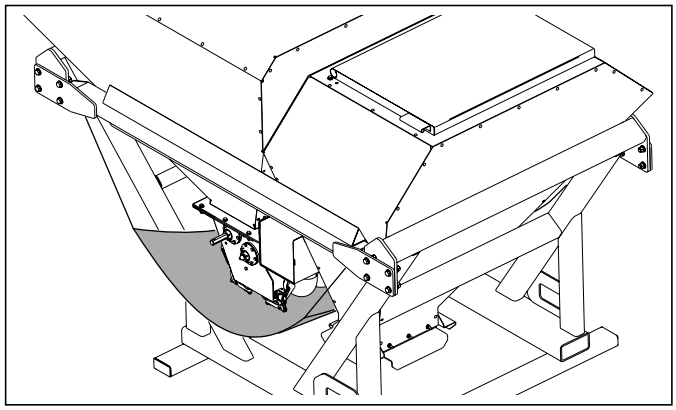

Figure 14 31105
Meter Sample Collection

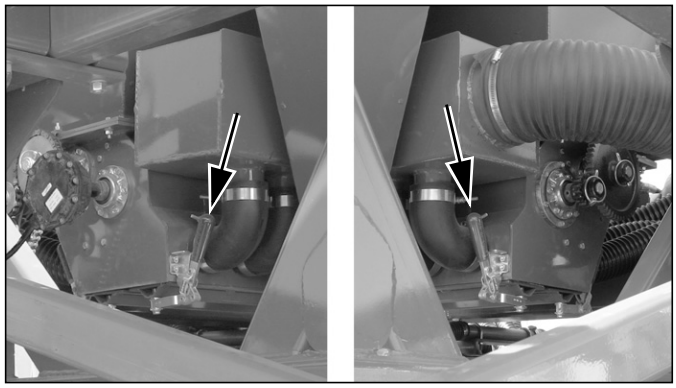

Figure 15 31101
Calibration Door Handles

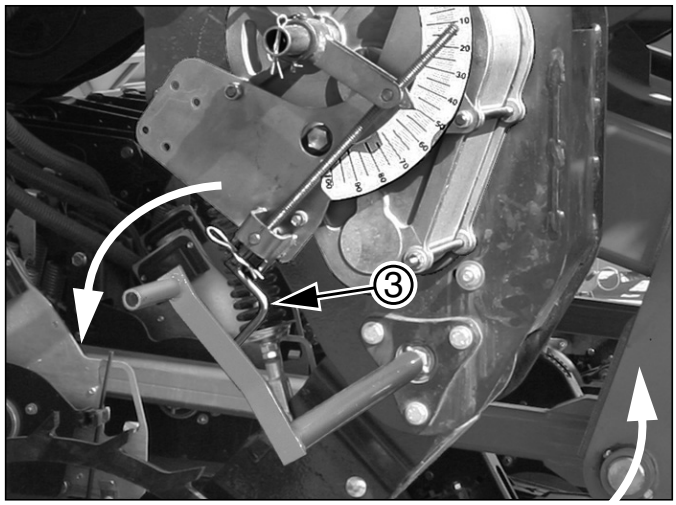

Figure 16 31000
Calibration Crank (Meter)

Calibration Adjustment

Once a sample has been taken, two steps remain:

a. Calculate the current rate.

b. If needed, calculate and apply an adjustment to the gearbox setting.

Calibration: Rate Calculation

30. If not already done, weigh the metered sample. This is the gross weight.

31. Subtract the weight of the empty containers (the tare) from the gross weight.

$$Net_Weight = Gross_Weight - Tare$$

If your sample size was based on cranking for a full hectare or acre, no further rate calculation is necessary. The net weight is the per-hectare or per-acre rate. Skip to step 33.

32. If the sample size was $^1/_{10}$th ha (or ac), calculate the rate for the full area.

$$Area_Rate = Net_Weight \times 10$$

Calibration: Gearbox Adjustment

33. If the calculated rate is within about 2% of your target, there may be no benefit in attempting further calibration. Resume at "**Row Sample Close-Out**" on page 26 or "**Meter Sample Close-Out**" on page 27.

34. Calculate a gearbox scale adjustment. Divide the target[a] rate by the sampled rate.

$$Factor = \frac{Target_Rate}{Area_Rate}$$

35. Use this factor to determine the next gearbox setting.

$$Next_Setting = Previous_Setting \times Factor$$

36. Reset the gearbox adjuster to the "Next_Setting" value.

For corrections of 5% or more, re-calibration is recommended.

If a Low range correction puts the "Next_Setting" above 90, start settings development over in High range.

If a High Range correction puts the "Next_Setting" below 20, start settings development over in Low range.

Example based on YP4025-1670:
The example in this column is based on a target rate:
120 kg/ha
a gearbox setting of:
80
and a row sample, using 16 containers.
When empty the collection of 16 containers weighs:
1.1 kg

Example:
The sample and all containers weighs a total of:
12.6 kg

The net weight of the sample is:
12.6 - 1.1, or:
11.5 kg

Example:
Area rate for the sample is:
11.5 x 10, or:
115 kg/ha

This is just approximately 4% under the desired rate, and is probably worth adjusting for.

Example:
120 ÷ 115 is:
1.043 or 104.3%

Example:
80 x 1.043 is:
83.5

Note: The gearbox adjustment has a near-linear effect on rates only near mid-scale or for small adjustment changes. For corrections of 10% or more, or near the ends of the scale, recalibration is essential, as further adjustment is likely.

a. Use the desired field application rate. Do not use any "adjusted" rate used to determine the initial gearbox setting.

Coulter Adjustment

The frame-mounted coulters standard on the YP2425F-2470, YP4025F-1630 and YP4025F-1670 are configured for “zone” application: 5cm offset from seed furrow, and
5cm depth, or “2x2”in.

As blades wear, or under unusual field conditions, you may need to adjust the coulter depth. If the depth is adjusted, the applicator needs to be adjusted as well.

Coulter Height Adjustment

Refer to Figure 17

1. Raise the planter. Install transport locks.
2. Move the planter to a flat level surface. A paved area is ideal.
3. At each coulter, measure the raised tool bar height (“*Bar_Height*”) ①.
4. For a 2.5cm (2in) coulter depth, compute the ideal raised height ② of the disk edge.

   Metric:

   $$Edge_Height = Bar_Height - 66 - 5$$

   Inch:

   $$Edge_Height = Bar_Height - 26 - 2.5$$

5. Reset the coulter shank to the new “*Edge_Height*”.

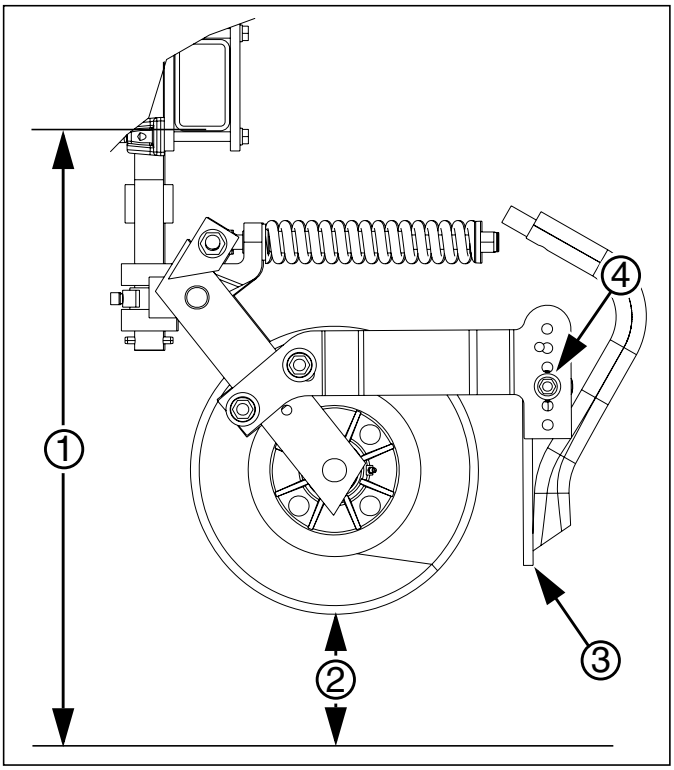

Figure 17
Dry Fertilizer Coulter

Coulter Applicator Adjustment

Normally, the coulter tine tip ③ is set to exactly ground level, although you may set it higher or lower for unusual conditions. To change the height, loosen the mounting bolt ④ and move the applicator weldment up or down.

If you are adjusting the tine height, to ground level, with the planter raised, use:

Metric (cm):

$$Tine_Height = Edge_Height + 5$$

or, U.S. customary (inches):

$$Tine_Height = Edge_Height + 2.5$$

Frame-Mounted Coulter Force

In normal operation at target running depth, the spring is at full extension or only slightly compressed. It compresses briefly as obstructions and denser soil are encountered.

Coulter springs are set to 181 kg (400 lbs). In normal operation at target running depth, the spring is at full extension. It compresses briefly as obstructions are encountered.

- In heavy no-till conditions, you may observe the springs in compression most of the time. This means that the blades are not reaching the desired coulter depth. If implement weight is sufficient, you can increase the spring down-force to compensate.
- In light but rocky conditions, the factory spring setting may be higher than needed. You can extend blade life by reducing the force at which the blades ride up over obstructions.

To adjust the coulter spring:

Refer to Figure 18

1. Raise the planter and install transport locks.
2. Determine the new spring length ① desired. See the table at right.
3. Measure the current length of the spring(s) to be changed. If already shorter than 24.8cm ($9\frac{3}{4}$in), or longer than 26cm ($10\frac{1}{4}$in), do not further adjust them.
4. Loosen the jam nut ②.
5. Rotate the adjuster nut ③ until the spring is at the new length. Tighten the jam nut.

Note: If all springs are continuously in compression, the coulters can lift the wing frames off the ground (at the gauge wheels), resulting in uneven coulter depth and/or uneven seed depth. If the planter is already operating at maximum down-pressure, reduce coulter depth.

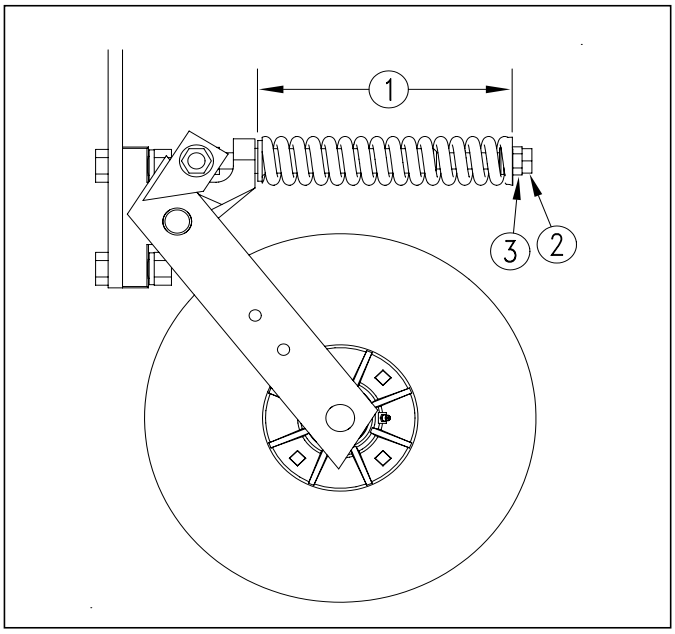

Figure 18 27139
Frame-Mounted Coulter Spring

Spring Length ①	Force at Blade
26.0 cm (10.25 in)	136 kg (300 lbs)
25.4 cm (10.00 in)	181 kg (400 lbs)
24.8 cm (9.75 in)	238 kg (525 lbs)

NOTICE

Machine Damage Risk:
Do not use spring lengths shorter than 24.8 cm (9.75 in). It may contribute to premature parts failure which will not be covered by warranty.

Troubleshooting

The tables of this section cover possible issues specific to the YP24/YP40 DF/seeder feature.

See also the Troubleshooting section of the 401-406M or 401-571M Operator manual.

Dry Fertilizer Troubleshooting

Problem	Cause	Solution
Delivery Hoses Plugging	Insufficient airflow to operate both fertilizer and seed delivery systems.	Increase fan speed (page 19). If already at 3800 rpm, open fertilizer-leg butterfly valve (page 19).
	Fan circuit running in reverse	Check and re-connect circuit hoses (see 401-406M or 401-571M Operator manual).
	Fan won't run fast enough at maximum tractor circuit setting	Check butterfly valves. Notes that tractor must be able to supply 18 gallons/minute at 200 psi.
	Fan speed low on capable tractor. Hydraulic fan check valve is installed backwards	Reverse installation of check valve (see 401-406M or 401-571M Operator manual).
	Air leaks	Check: hopper lid, hopper base to airbox seal, clean-out and calibration door seals and delivery hoses.
No Fertilizer Flow (all rows)	False-positive blockage detection. Some fine materials and/or low rates, may cause the monitor to report blockage.	Shut off monitoring for fertilizer rows.
	Gearbox set to zero	Set and calibrate gearbox (page 24).
	Gearbox at zero, even though not set to zero.	Check that gearbox indicator arm is pinned to adjuster shaft.
	Drive chain broken or skipping	Check chain condition and slack (page 39).
	Material run-out.	Re-load fertilizer. Re-check rate setting and level sensor function if run-out was unexpected.
	Bridging in fertilizer hopper due to air leak	Inspect seal under lid. Replace as necessary. Check that hook and shackle have not become mis-adjusted.
	Bridging in fertilizer hopper due to material consistency	Clean-out and replace material. See page 35.
	Meter box completely plugged.	Clean-out hopper and meter. See page 36.
	Butterfly valve closed at fertilizer leg	Check setting of valve. Tighten bolt.
No Fertilizer Flow (some rows)	Blockage inside tower.	Remove cap. Clear blockage.

Dry Fertilizer Troubleshooting

Problem	Cause	Solution
No Fertilizer Flow (single row)	Bridging at inlet of applicator tube	Remove hose. Clear bridge. Check material for oversize content. Also check meter flutes for damage. Generally, anything that passes an undamaged flute will also pass all down-stream constrictions.
	Bridging at or near tip of applicator tube	Clean out tube. Inspect fertilizer for clumping, oversize particles and foreign matter.
Application Rate Low (all rows)	Final drive gears are in Low range when High is required	Exchange gears (page 23).
	Incorrect meter setting	Check basic setting against chart (page 63). Review calibration steps (page 25).
	Excessive field speed	Chart was developed at 9.7 kph. Fan and meter performance may not scale to higher speeds.
	Density adjustment and/or calibration not performed	Adjust density (page 66) before selecting initial rate settings. Calibrate (page 25).
	Excessive gaps between passes. Area actually covered is less than intended.	Check that pass gap is one row space. Adjust marker extension if necessary.
	Ground drive arm spring has failed or gotten out of adjustment.	Check spring. Reset
Application Rate Low (some rows)	Hose connection incorrect at manifold outlets. Outside two outlets serve only wing end towers and not inner towers	Reconnect inside towers to inside manifold ports (page 17).
	Meter flutes worn or broken	Inspect and replace flutes (page 36).
	Foreign matter blocking flow at flute compartment	Clean-out hopper (page 35). Inspect and clean above flutes.
Application Rate Low (single row)	Airbox outlet plugged.	Clean-out hopper (page 35). Inspect manifold outlet area.
Application Rate High (all rows)	Final drive gears are in High range when Low is required	Exchange gears (page 23).
	Density adjustment and/or calibration not performed	Adjust density (page 66) before selecting initial rate settings. Calibrate (page 25).
	Overlap between passes. Area actually covered is greater than intended.	Check that pass gap is one row space. Adjust marker extension if necessary.
Application Rate High (some rows)	Hose connection incorrect at manifold outlets. Center four outlets serve only inside towers and not wing end towers	Reconnect wing end towers to outside manifold ports (page 17).
	Meter flutes worn or broken	Inspect and replace flutes (page 36).

This table covers possible issues specific to the YP24/YP40 DF/seeder feature.

See also the Troubleshooting section of the 401-406M or 401-571M Operator manual.

Seeding Troubleshooting

Problem	Cause	Solution
Seed Hoses Plugging	Insufficient airflow to operate both fertilizer and seed delivery systems.	Increase fan speed (page 19). If already at 3800 rpm, open seed-leg butterfly valve (page 19).
	Air leaks	Check: hopper lid, hopper base to airbox seal, clean-out door seal and delivery hoses.
	Fan circuit running in reverse	Check and re-connect circuit hoses (see 401-406M or 401-571M Operator manual).
	Fan won't run fast enough at maximum tractor circuit setting	Check butterfly valves. Notes that tractor must be able to supply 18 gallons/minute at 200 psi.
	Fan speed low on capable tractor. Hydraulic fan check valve is installed backwards	Reverse installation of check valve (see 401-406M or 401-571M Operator manual).
No Seed Flow (all rows)	Material run-out.	Re-load seed. Re-check rate setting and level sensor function if run-out was unexpected.
	Bridging in seed hopper due to material consistency	Clean-out and replace material. See page 35.
	Butterfly valve closed at seed leg	Check setting of valve. Tighten bolt.
Planting Rate Low (single row)	Airbox outlet plugged.	Clean-out hopper (page 35). Inspect manifold outlet area.

Maintenance

Maintenance

Proper servicing and maintenance is the key to long implement life. With careful and systematic inspection, you can avoid costly maintenance, downtime, and repair.

Always turn off and remove the tractor key before making any adjustments or performing any maintenance.

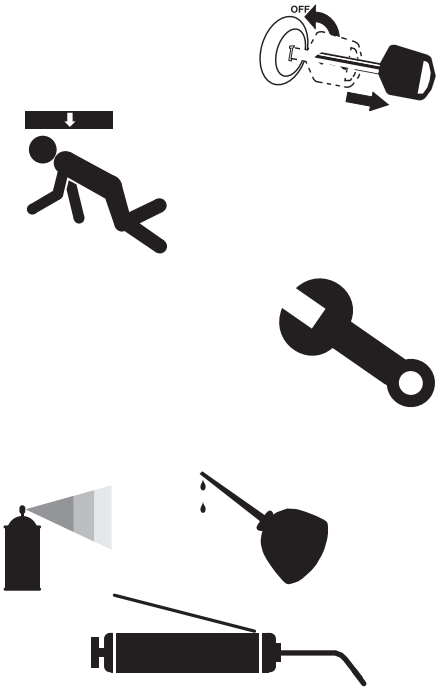

WARNING

Crushing Hazard:
Always have transport locks in place when working on implement. You may be severely injured or killed by being crushed under a falling implement.

1. After using your planter for several hours, check all bolts to be sure they are tight.
2. Remove excess slack from chains. Clean and use chain lube on all roller chains as needed.
3. Lubricate areas listed under "**Maintenance Schedule**" on page 40.
4. Replace any worn, damaged, or illegible safety labels by obtaining new labels from your Great Plains dealer.

No-Change Maintenance Items

This section of the 403-362M manual covers planter elements that introduce changes to maintenance, compared to a standard YP24 or YP40.

Topics *unchanged* from the standard YP24 or YP40 are:

- Hydraulic Maintenance
- Marker Maintenance
- Leveling and Alignment
- Seed Meter Maintenance
- Seed Flap Maintenance
- Liquid Fertilizer Maintenance

Material Clean-Out

When planting is completed, it is commonly the case that some fertilizer and seed remains. There may be seed in the hoppers, hose lines, and meters.

The clean-out procedures are different for the fertilizer and seeding systems.

Seeding System Clean-Out

Refer to the 401-406M or 401-571M Operator manual. Seeding system clean-out is the same as for the standard YP24 or YP40 planter, with two minor differences:

- The seed hopper is smaller and cannot be entered for problem clean-outs.
- There are no Y-tubes in the seed delivery system.

Figure 19 shows the location of the seed airbox clean-out door handles.

Fertilizer System Clean-Out

1. When planting is completed, raise the planter, but leave the fan running for 30 seconds to empty the base of the meter, delivery hoses, and applicators.
2. Unless a tarp will be used to collect the remaining fertilizer, move the planter to an area with a flat clear surface. Comply with fertilizer supplier instructions for suitable areas at which to cover fertilizer.
3. Install transport locks on the raised planter. Shut off the tractor. Mount a collection tarp if only a small amount of fertilizer remains.

Refer to Figure 20

4. Open the calibration door ① (rear door). If the air system is empty, no material may fall.
5. Open the clean-out door ② (forward door). Expect material to flow in significant volume until the hopper is empty.
6. Turn the ground drive wheel several revolutions to empty the meter flutes.

   If a second person is available, open the hopper lid and inspect the meter flutes while turning the wheel.
7. Recover the fertilizer.
8. With the clean-out and calibration doors open, power-wash the fertilizer hopper from above. Rotate the ground drive to expose all meter flutes to the water. Wipe doors, seals and meter flanges.
9. Use a wire to tie the doors partly open during drying and storage. This allows condensation to drain while preventing pest entry. See page 12 for lid operations prior to storage.

CAUTION

Possible Dust and Chemical Residue and Fume Hazards:
Wear a respirator, and any other protective equipment specified by the seed supplier and/or seed treatment supplier. Expect chemical residue, dust and fumes during clean-out.

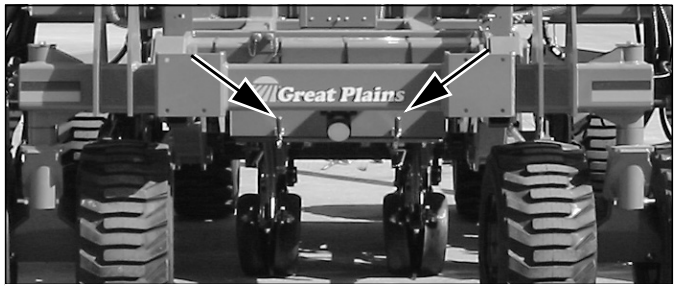

Figure 19 31107
Seed Airbox Clean-Out Door

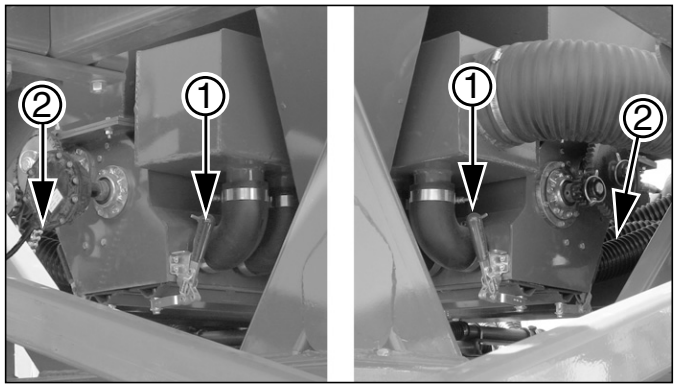

Figure 20 31101
Meter Door Handles

NOTICE

Equipment Damage Risk:
Do not leave fertilizer in the hopper for extended periods. Fertilizer is generally corrosive, and will attack expose metal surfaces.

Meter Flute Replacement

Fertilizer meter flute stars wear over time, and can be chipped or fractured by hard foreign matter, such as rocks or ice. Inspect flutes periodically. Replace as needed.

To remove the flute shaft:

Refer to Figure 21

1. Perform a hopper clean-out (page 35).
2. Dismount the rpm sensor (not shown) from the left end of the shaft ①. Dismount the Driven Range gear ② at the right end.
3. Remove the six $^1/_4$-20 self-tapping screws ③ from the outside of the flange at the shaft right end.
4. Pry the flange loose from the meter housing (the flange is sealed to the housing with silicone).
5. Remove the meter shaft.
6. When replacing stars ④ (each of which is two 817-018C halves), be sure to match the irregular arrangement of stars and spacers as shown in the Parts manual.
7. Clean any residual silicone sealant from the shaft flange and meter box housing. Apply fresh sealant.
8. Re-insert the shaft.
9. Secure the flange to the box housing.

   Carefully re-insert the screws. Avoid cross-threading.

   Do not exceed 7 N-m (5 ft-lbs) of torque.
10. Re-mount the rpm sensor on the shaft left end, and the Range gear at the right end.

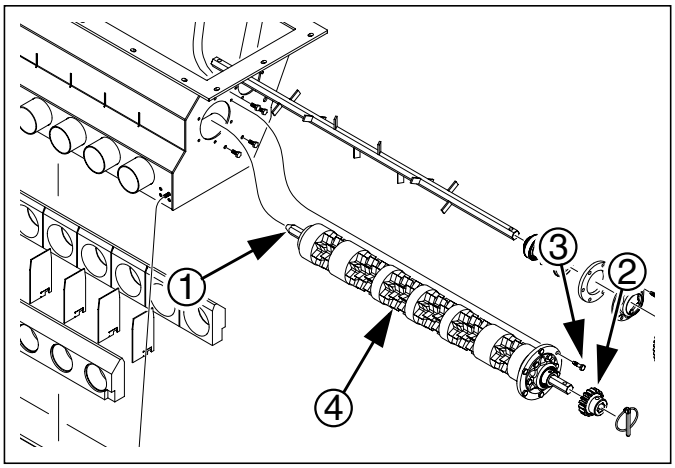

Figure 21
Remove Meter Flutes

Problem Fertilizer Clean-Outs

For normal unloading of residual materials at completion of planting, see "**Material Clean-Out**" on page 35.

If, however, parking and storage recommendations have not been followed, it is possible to have hard-to-remove material present.

If the material fails to pass through the fertilizer meter clean-out door, take the following steps to remove it. Do not consider entering the hopper until first completing these tasks.

Open the clean-out door (page 35).

Remove the strainer (page 12) and evaluate the problem.

For small amounts of residual materials, poking with a long pole may suffice to push it through the clean-out.

If poking doesn't produce satisfactory results, and you intend to try wash-out, at least poke one hole down to the meter clean-out, so that water can flow out.

For example:

- If the problem is a single moveable large object, such as a dead animal, fishing out from above may be the solution.
- If the problem is congealed materials, scoop out a sample from above and see if the mass dissolves in water. If so, and there is a small amount of the material involved, rinsing, or rinsing and pumping the hopper from above may be the solution.

If wash-out is contemplated, start by introducing a small amount of water, and make sure that it appears at the clean-out within 15 minutes. If not, you will just be adding water to the problem. The hopper is not designed to hold water at full capacity. Add no more water, remove meter box instead, and clean out from below.

Removing Meter Box

Removing the meter box and inlet manifold exposes a 67x27cm (26x10.7in) hole through which stubborn material may be extracted.

Refer to Figure 22

1. Not shown: Loosen the gearbox-to-meter chain idler and remove the chain. Disconnect inlet and outlet hoses. Disconnect or remove the rpm sensor.
2. Loosen all the nuts securing the meter box to the hopper bottom plate. Unscrew the nuts to the bolt ends, but do not completely remove the nuts.
3. The meter box has a bead of silicone sealant between it and the bottom plate. Use a pry tool to free the meter box from the hopper bottom plate.
4. Once hanging entirely on the loose bolts, remove the nuts and lower the meter box from the hopper.

When re-mounting the meter box, scrape off the old silicone sealant and replace it with fresh sealant.

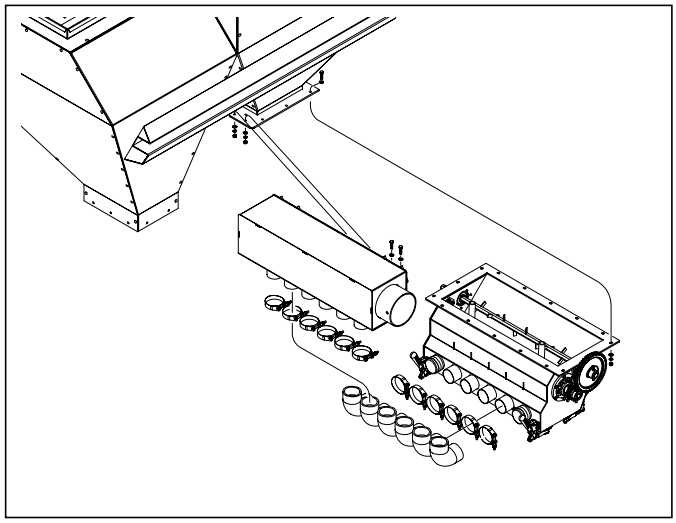

Figure 22 29718
Remove Meter for Cleaning

Hopper Entry

Normal use of the fertilizer hopper and routine maintenance do not require entry. The hopper vent tube structure includes features to aid emergency egress. It is not intended for routine entry. However, do not remove the vent tube structure, as it is required for pressure-balancing the space above the material.

▲ *A hopper that is full or merely appears full can be an entrapment hazard. You can sink entirely into the material, or into a void, and suffocate in a matter of seconds. Bridges and crusts are especially dangerous.*

▲ *You can be overcome by hazardous fumes very quickly even in an empty hopper with the lid open.*

▲ *A partially full hopper, even with no bridging present, is a suffocation risk.*
Oxygen levels may be insufficient and/or dust levels may be too high for breathing.

▲ *Do not enter a hopper for loading material.*

▲ *Do not enter a hopper for unloading material.*

▲ *Do not enter a hopper for routine cleaning.*

▲ *Do not enter a hopper for any meter maintenance.*

▲ *Never enter a hopper without at least one trained and equipped attendant present.*

▲ *Never enter a hopper for any reason unless you fully comply with applicable laws, regulations, rules, agreements, and the instructions in this section. Where applicable laws, regulations, rules, agreements contradict an instruction below, do not follow that instruction.*

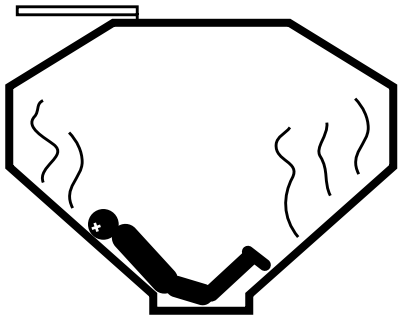

DANGER

Rapid Suffocation Hazard:
Encrusted grain may be loose and flowing beneath the crust. Any hollow spaces are highly likely to have insufficient oxygen and/or toxic gases from microbial action. Falling through a crust in either case can result in death in a matter of seconds. Never enter a hopper to dislodge a crust or bridge.

Depending on their use, the YP2425F-2470, YP4025F-1630 and YP4025F-1670 fertilizer hopper may be or become a "*permit-required confined space*" under U.S. OSHA regulations (29 CFR 1910.146) and similar regulations, statutes, insurance agreements and local business policy. A written policy and permitting process may be required for any hopper entry.

Hopper entry may be necessary in some unusual circumstances, such as:

- hopper level or pressure sensor replacement; or,
- removal of obstructions too difficult to pull out with the meter box removed and not susceptible to fishing or pumping out from the open lid.

Should such a situation arise, observe the following precautions:

1. *Evaluate the hazards*
   Review the material safety data sheets (MSDS) for any treatments and/or fertilizers used in the hopper since it was last thoroughly cleaned, and the most recent materials even if the hopper was subsequently cleaned. Retain the MSDS information for any medical treatment that might be required.
2. *Designate or engage a team*
   Hopper entry is never a single-person activity. At least one attendant/observer is necessary. Give priority to individuals already trained in confined space operations. Designate a leader (who will not be the entrant) with authority to terminate the activity.
3. *Protect the team*
   Obtain the necessary safety equipment specified for confined space exposure to those materials, paying particular attention to respiratory support and protection. This may include contaminant detection equipment and positive ventilation to refresh air in the hopper.
4. *Equip the team*
   At least one attendant must be equipped with communications capability, to summon outside aid in the event that the hopper worker is overcome. Equip the entrant with a safety harness and safety line.
5. *Train the team*
   Review the hazards. Review the procedures. Understand the use of the protective equipment. Know the steps to take in emergencies. Practice them. Train the observer to summon aid, and not attempt hopper entry if the entrant is overcome.
6. *Secure the planter*
   Lower the planter or block the wheels to prevent movement.
7. *Disrupt crusting or bridging*
   From outside the hopper, break up any hard surfacing on top of the material, or forming layers within the material. Such layers are extremely dangerous to stand on.
8. *Empty the hopper*
   Follow the steps at "**Material Clean-Out**" on page 35. If a blockage makes this impossible, use an external pump line to remove as much material as possible without performing a hopper entry. Pump until at least some material is exiting the clean-out door. Leave the clean-out door open.
9. *Clean the hopper*
   From the outside at the walkboard, power-wash the inside of the hopper. Use a mild detergent sprayer. Rinse thoroughly.
10. *Air the hopper*
    Leave the hopper lid and clean-out door open, and do not commence work until the rinse water has completely evaporated.
11. *Plan the work. Work the plan.*
    Postpone the work if any team members, equipment or other resources are missing, or weather/lighting conditions are not favorable. Terminate and evacuate if any unexpected situations arise.

Chain Maintenance

Inspect and lubricate chains regularly. The slack of new chains tends to increase during the first few hours of operation due to seating.

See also "**Chain Routing YP4025F**" on page 51.

Chain Slack

Check slack at fixed idlers within the first 8 hours of operation and tighten idlers as necessary. Check slack at spring-operated idlers seasonally.

Refer to Figure 23, which, for clarity, greatly exaggerates slack, and omits the idlers.

1. Measure the span ① for allowable slack:
   Locate the longest span of each chain (usually the span which does not run through the idlers).
2. Determine the ideal slack:
   Long chains (over 36in/91cm): $^1/_4$in per foot
   Vertical short chains: $^1/_4$in per foot (2.1cm/m)
   Horizontal short chains: $^1/_2$in per foot (4.2cm/m).
3. Measure the current slack ②:
   Acting at a right angle to the chain span at the center of the span, deflect the chain in both directions. The slack is the distance of the movement.
4. Adjust the idlers for ideal slack.

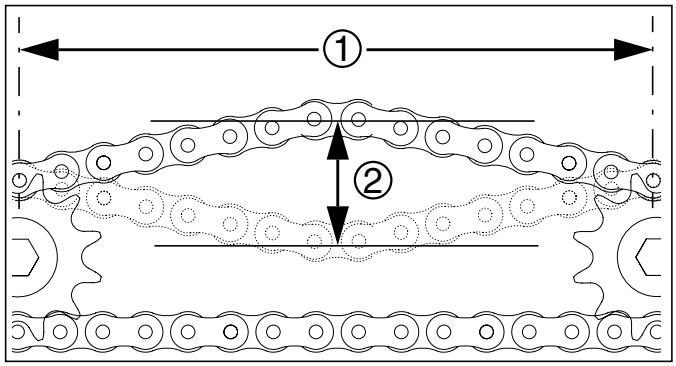

Figure 23 27264
Measuring Chain Slack

Chain Clips

Whenever mounting a chain, make sure the clip at the removable link is oriented to minimize snags.

Refer to Figure 24 (arrow shows chain direction)
Install clip with open end facing away from direction of chain travel (shown by gray or striped arrows in chain routing diagrams).

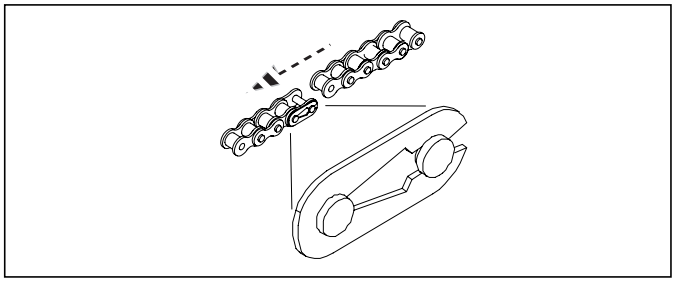

Figure 24 26482
Chain Clip Orientation

Fertilizer Meter Drive Chain

There are four (4) chains in the fertilizer ground drive system. See page 51 and page 52 for locations.

Maintenance Schedule

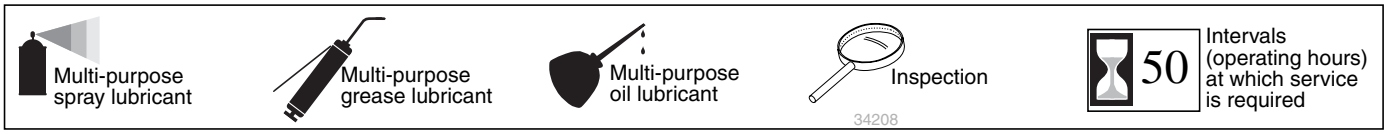

This section of the 403-362M manual covers planter elements that introduce changes to lubrication and scheduled maintenance, compared to a standard YP24 or YP40. For all other planter lubrication points, see the 401-406M or 401-571M Operator manual.

Chain: Ground Drive

1 chain total

Type of Lubrication: Chain Lube
Quantity: Coat Thoroughly

Note: Lubricate chains any time there is a chance of moisture, and when being stored at the end of the planting season.

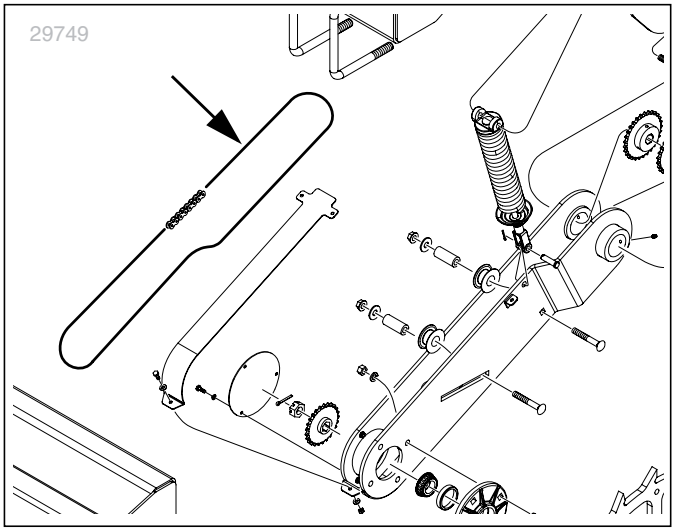

Chains: Ground Drive Transmission

3 chains total

Type of Lubrication: Chain Lube
Quantity: Coat Thoroughly

Note: Lubricate chains any time there is a chance of moisture, and when being stored at the end of the planting season.

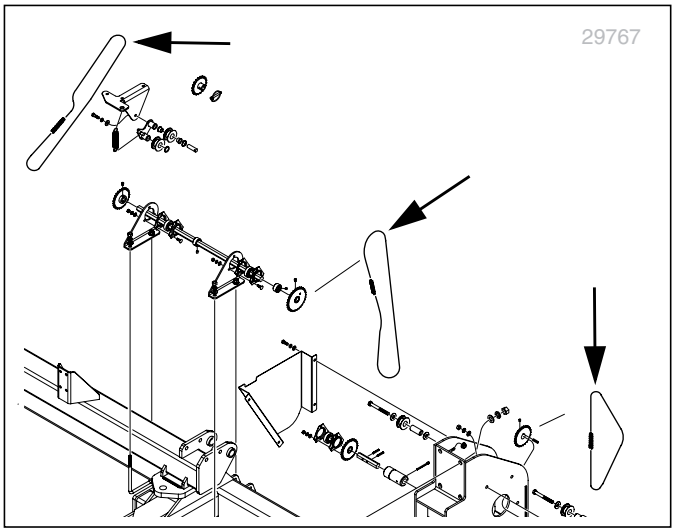

Coulter Pivots

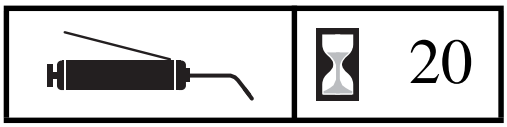

one zerk per pivot;
16 total

Type of Lubrication: Grease
Quantity: Until grease emerges

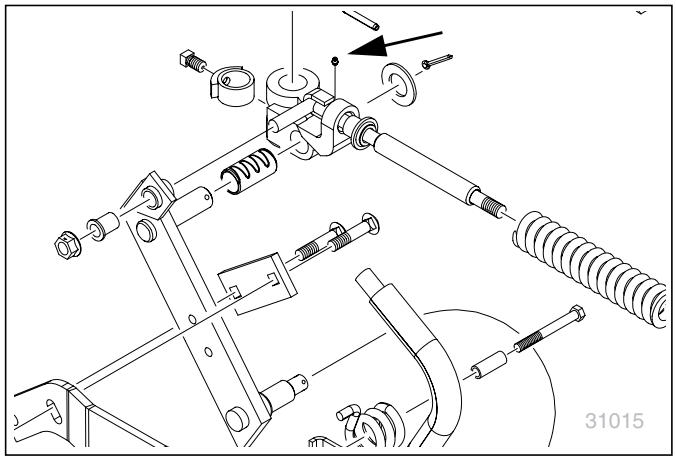

Coulter Hubs

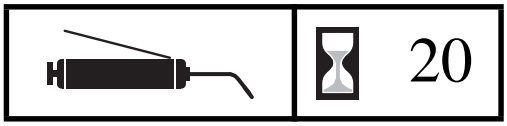

one zerk per hub;
16 total

Type of Lubrication: Grease
Quantity: Until resistance is felt

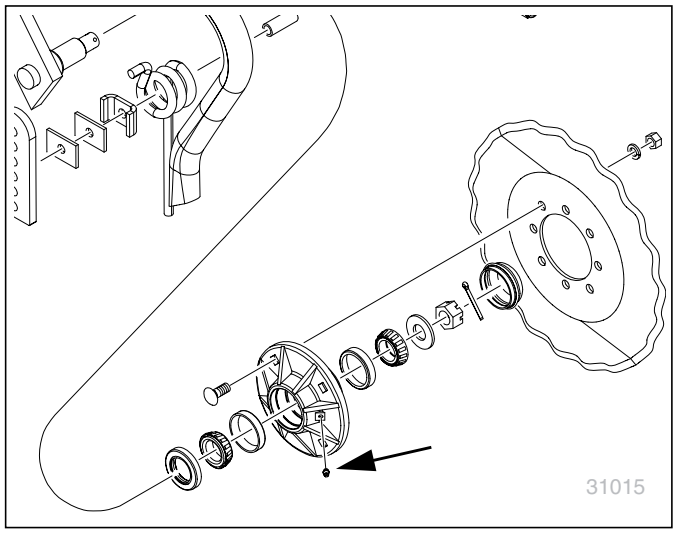

Ground Drive Wheel Arm Pivot

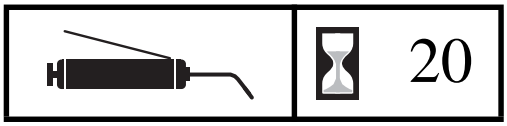

2 zerks total

Type of Lubrication: Grease
Quantity: Until grease emerges

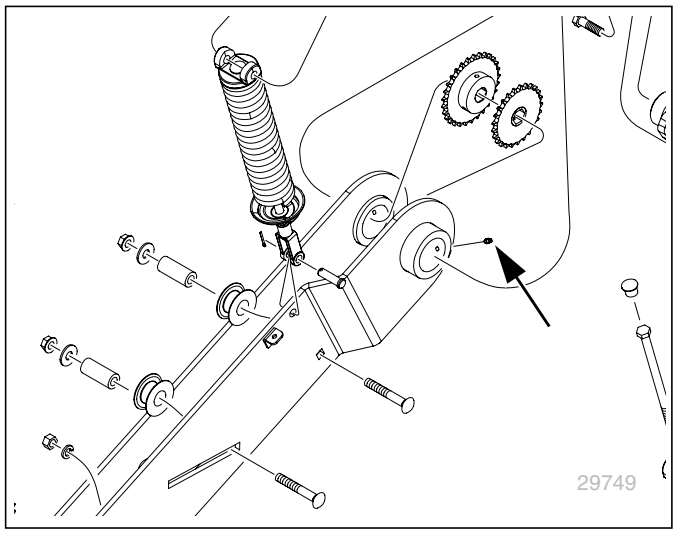

Ground Drive Wheel Hub

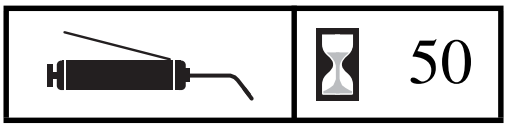

one zerk per hub;
1 total

Type of Lubrication: Grease
Quantity: Until resistance is felt

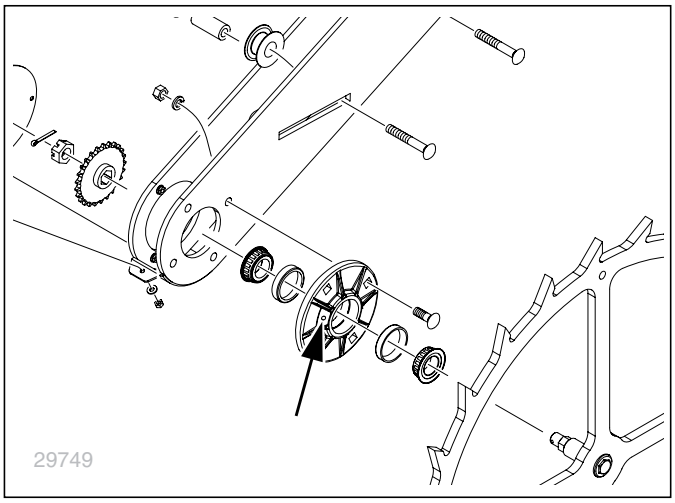

Ground Drive Wheel Bearings

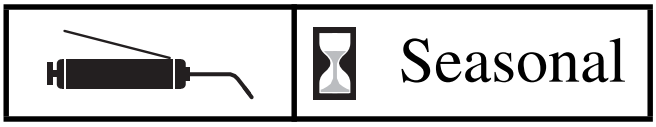

Two races per hub,
1 hubs;
2 races total

Type of Lubrication: Grease
Quantity: Repack

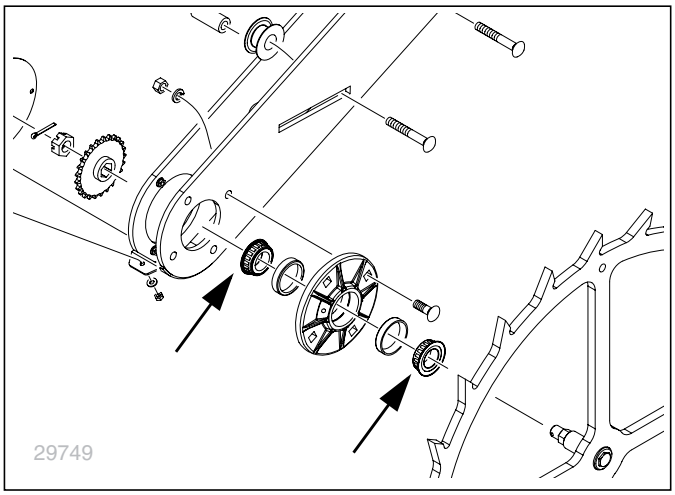

Coulter Hub Bearings

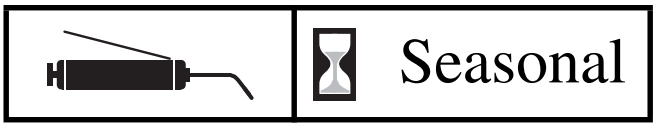

Two races per hub,
16 hubs;
32 races total

Type of Lubrication: Grease
Quantity: Repack

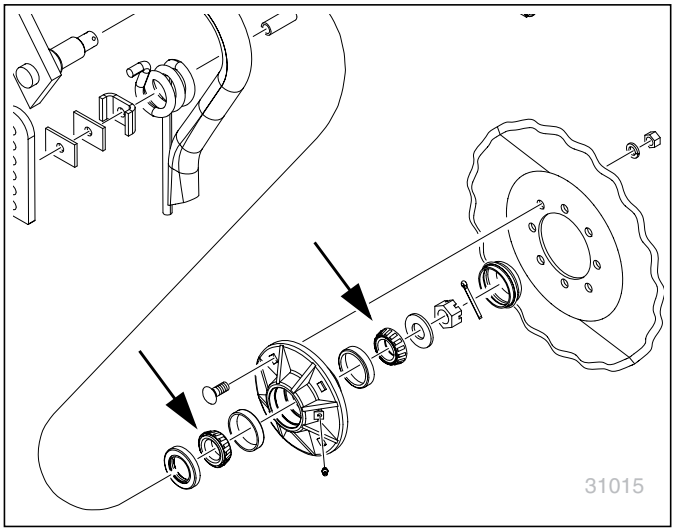

Air Release Tube

Seasonal

1 tube each wing end fertilizer delivery hose;
2 tubes per planter

Inspect. Clean any build-up on screen. Replace if damaged. Re-install with opening facing down.

Note: Although depicted in exploded view, the tube is a weldment and the screen cannot be removed.

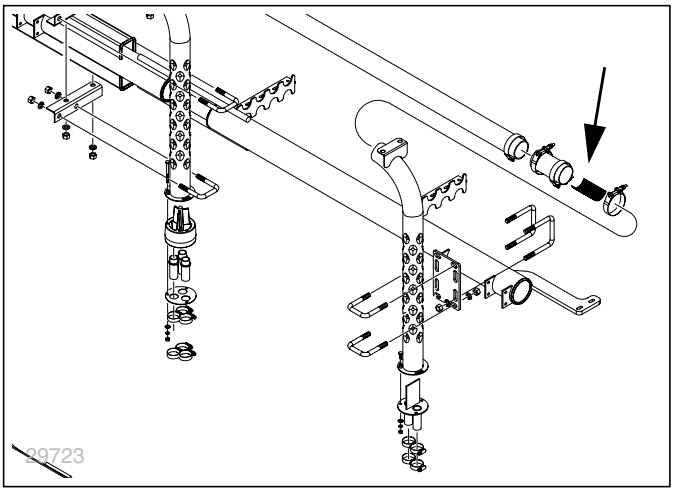

Meter Box Door Seals

Seasonal

2 seals per planter

Inspect and replace if leaks are detected or appear imminent.

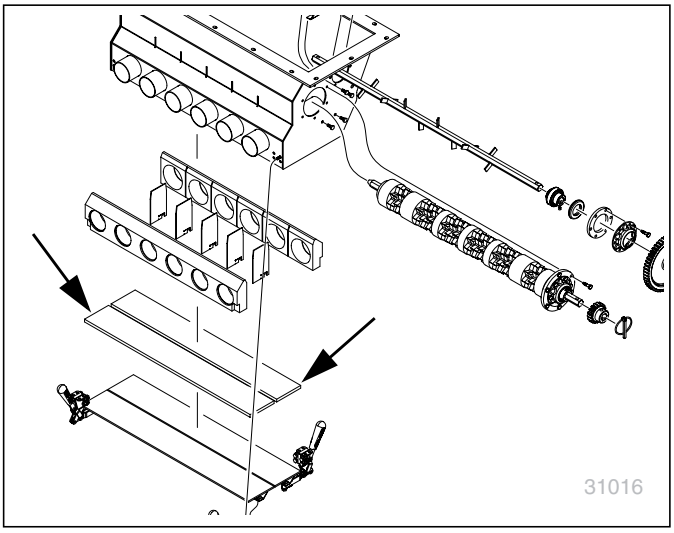

Meter Flutes

Seasonal

1 flute shaft per planter,
2 sets of 2 stars (4 stars),
4 sets of 3 stars (12 stars);
16 stars total (each star is two halves)

Inspect from above with hopper empty. Shaft rotation is required to expose all surfaces. Replace any broken or visibly worn stars.

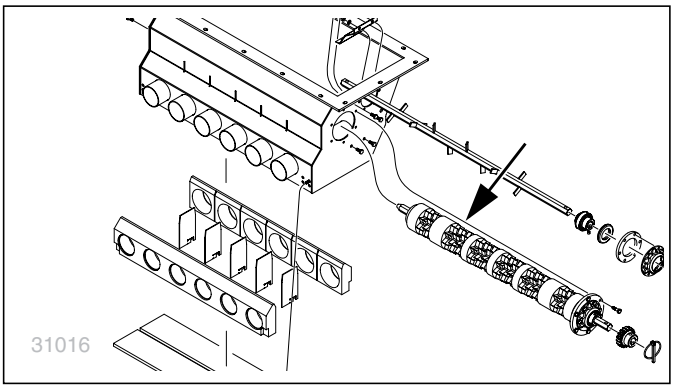

Gearbox Oil

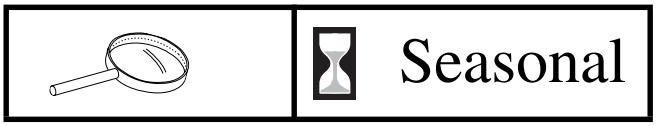

1 port per gearbox; 2 total

Type of Lubrication: High Quality SAE 5W-30 oil
Quantity: 6.5 pints (3.1 liters)

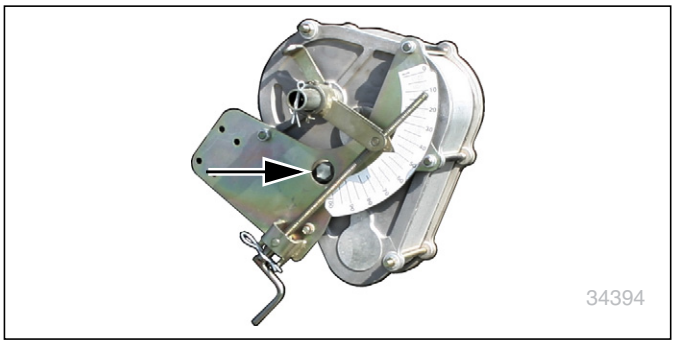

Seed Lubricants

Note: Seed only - fertilizer does not use lubricants.

29248

Singulator Plus Meters (all seeds)
Ezee Glide Plus Talc-Graphite Mix

821-069C bucket, 5 gallon (19 liter)

Ezee Glide Plus Lubricant
To maximize performance of Great Plains metering systems, it is imperative to use only “Ezee Glide Plus” lubricant. “Ezee Glide Plus” Talc-Graphite lubricant is mandatory for all seeds, especially treated or inoculated seed. *Thorough mixing of seed and added lubricant is required.*

Recommended usage:

For clean seeds other than milo and cotton sprinkle one cup of Ezee Glide Plus Talc per 4 bushels or units (170 ml per 100 liters) of seed.

For milo and cotton double the application to one cup (or more) per 2 bu or units (335 ml per 100 liters) of seed.

Adjust this rate as necessary so all seeds become coated while avoiding an accumulation of lubricant in the bottom of the hopper.

For seed with excessive treatment, or for humid planting environments, increase the rate as needed for smooth meter operation.

⚠ CAUTION

Irritation and Chronic Exposure Hazard:
Wear gloves. DO NOT use hands or any part of your body to mix seed lubricant. Wear a respirator when transferring and mixing. Avoid breathing lubricant dust. Not an acute hazard. May cause mechanical eye or skin irritation in high concentrations. As with all mineral spills, minimize dusting during clean-up. Prolonged inhalation may cause lung injury. Product can become slippery when wet.

25477

Finger Pickup Meters
EZ-Slide Graphite Powder

821-042C bottle, 1 pound (450 grams)
821-060C jug, 5 pound (2.3 kg)

For Finger Pick Up Meters Only
Use only approved Graphite Powder available from Great Plains Mfg. Inc. or Precision Planting to ensure proper lubrication of finger pickup corn seed meters.

Recommended usage:

For finger pickup meters, add one tablespoon (15 ml) of graphite for each unit of seed corn (80,000 kernels).

In high humidity conditions, or seeds with heavy seed treatments, increase the application to two tbsp (30ml).

If delivery of seed from the hopper to the finger meter is an issue, add “Ezee Glide Plus” talc and graphite blend at a rate of one cup (237ml) per 4 units of seed. Adjust until issue is resolved.

⚠ CAUTION

Irritation and Chronic Exposure Hazard:
Wear gloves. DO NOT use hands or any part of your body to mix seed lubricant. Wear a respirator when transferring and mixing. Avoid breathing lubricant dust. Not an acute hazard. May cause mechanical eye or skin irritation in high concentrations. As with all mineral spills, minimize dusting during clean-up. Prolonged inhalation may cause lung injury.

Options

The YP2425F and YP4025F Dry Fertilizer/Seeder subsystem occupies planter spaces that are used by other subsystems on standard models. Refer to the Options topic in the 401-406M or 401-571M Operator manual for option details and ordering information.

Compatible Options

- Hydraulic Tongue
- Markers
- Trailer Hitch
  (although all of the Liquid Fertilizer options are not recommended or incompatible)
- Seed Lubricants
- Gauge Wheel Scrapers
- Inside and Outside Disk Scrapers
- Seed Meters and Wheels
- Seed Firmers
- Row Unit Press Wheels

Options Not Recommended

- Swath Command
  (there is no provision for shutting off fertilizer flow to idled rows)
- Lock-Up Pins
  (there is no provision for shutting off fertilizer flow to unused rows)
- Liquid Fertilizer Carts
- Ground Drive Liquid Fertilizer Pump
- High Rate Dribblers

Incompatible Options

- Frame-Mounted Options
  (the standard dry fertilizer frame-mounted coulter/applicators occupy the mounting points)
- Liquid Fertilizer Tanks
  (the dry fertilizer walkboard and ground drive occupy the same space)
- Liquid Fertilizer Booms
  (these may interfere with dry fertilizer delivery hoses)
- Unit-Mounted Coulters
  (the frame-mounted dry fertilizer coulters occupy the same space)
- Unit-Mounted Row Cleaners
  (the frame-mounted dry fertilizer coulters occupy the same space)
- 82bu and 150bu Seed Hoppers
  (the dry fertilizer hoppers occupy the same space, and the fan is plumbed to feed two manifolds, not one)

Appendix A - Reference Information

Specifications and Capacities YP4025F

	YP4025F-1670	YP4025F-1630
Number of Openers	16	
Row Spacing	70 cm (27.6 inches)	30.0 inches (76 cm)
Swath	1120 cm (440.9in)	480.0in (1219 cm)
Span (width between end rows)	1050 cm (413.4in)	450.0in (1143 cm)
Seed Hopper Capacity	670 liters (19 bu)	
Fertilizer Hopper Capacity	1,440 liters (41 bu)	
Tractor Power Required	119 to 134 kW (160 to 180 hp)	
Hydraulic Circuits	4 Closed Center, 155 bar (2,250 psi), 95 liters/min (25 gpm)	
Transport Width	4.5 m (14ft 10in)	
Transport Height	3.6 m (11ft 9in)	
Transport Length[1]	12.8 m (42ft 0in)	
Transport Clearance	56 cm (22in)	
Auger Height, Fertilizer	2.7 m (9ft 0in)	
Auger Height, Seed	2.6 m (8ft 6in)	
Unfolded Width	12.1 m (39ft 7in)	
Working Length[1]	10.4 m (34ft 2in)	
Hitch to Opener Distance[2]	612 cm (241in)	
Wing Flex	20° up or down	
Weight, Empty, Base Configuration	12770 kg (28200 lbs)	
Weight, Full, Maximum Configuration	15210 kg (33500 lbs)	
Hitch Load	540 kg (1,200 lbs)	
Opener Travel	25 cm (10in)	
Opener Depth Range	0 to 10 cm (0 to 4in)	
Opener Down Pressure	156 to 249 kg (345 to 550 lbs)	
Tire Size	395/55B16.5 NHS Skid Steer	

[1] Assumes no optional rear hitch weldment

[2] Assumes 3-point hitch

Tire Inflation Chart

Tire data is unchanged from standard YP2425 or YP4025.

Specifications and Capacities YP2425F

	YP2425F-2470
Number of Openers	24
Row Spacing	70 cm (27.6 inches)
Swath	1680 cm (661.4in)
Span (width between end rows)	1610 cm (633.9in)
Seed Hopper Capacity	670×2 liters (19×2 bu.)
Fertilizer Hopper Capacity	1,440×2 liters (41×2 bu.)
Tractor Power Required	164 to 134 kW (220 to 180 hp)
Hydraulic Circuits	4 Closed Center, 197 bar (2,850 psi), 203 liters/min (54 gpm)
Transport Width	4.5 m (14ft 10in)
Transport Height (without markers)	3.6 m (11ft 9in)
Transport Length[1]	14.9 m (49ft 0in)
Transport Clearance	53 cm (21in)
Auger Height, Fertilizer	2.7 m (9ft 0in)
Auger Height, Seed	2.6 m (8ft 6in)
Field Width	12.1 m (39ft 7in)
Working Length[1]	11.3 m (37ft 2in)
Hitch to Opener Distance[2]	833 cm (328in)
Wing Flex	20° up or down
Weight, Empty, Base Configuration	9170 kg (20200 lbs)
Weight, Full, Maximum Configuration	13770 kg (30400 lbs)
Hitch Load	540 kg (1,200 lbs)
Opener Travel	25 cm (10in)
Opener Depth Range	0 to 10 cm (0 to 4in)
Opener Down Pressure	156 to 249 kg (345 to 550 lbs)
Tire Size	15-19.5 NHS 12 Ply

[1] Assumes no optional rear hitch weldment

[2] Assumes 3-point hitch

Torque Values Chart

Bolt Size	Bolt Head Identification					
	Grade 2		Grade 5		Grade 8	
in-tpi[a]	N-m[b]	ft-lb[d]	N-m	ft-lb	N-m	ft-lb
1/4-20	7.4	5.6	11	8	16	12
1/4-28	8.5	6	13	10	18	14
5/16-18	15	11	24	17	33	25
5/16-24	17	13	26	19	37	27
3/8-16	27	20	42	31	59	44
3/8-24	31	22	47	35	67	49
7/16-14	43	32	67	49	95	70
7/16-20	49	36	75	55	105	78
1/2-13	66	49	105	76	145	105
1/2-20	75	55	115	85	165	120
9/16-12	95	70	150	110	210	155
9/16-18	105	79	165	120	235	170
5/8-11	130	97	205	150	285	210
5/8-18	150	110	230	170	325	240
3/4-10	235	170	360	265	510	375
3/4-16	260	190	405	295	570	420
7/8-9	225	165	585	430	820	605
7/8-14	250	185	640	475	905	670
1-8	340	250	875	645	1230	910
1-12	370	275	955	705	1350	995
1 1/8-7	480	355	1080	795	1750	1290
1 1/8-12	540	395	1210	890	1960	1440
1 1/4-7	680	500	1520	1120	2460	1820
1 1/4-12	750	555	1680	1240	2730	2010
1 3/8-6	890	655	1990	1470	3230	2380
1 3/8-12	1010	745	2270	1670	3680	2710
1 1/2-6	1180	870	2640	1950	4290	3160
1 1/2-12	1330	980	2970	2190	4820	3560

Bolt Size	Bolt Head Identification					
	5.8 Class 5.8		8.8 Class 8.8		10.9 Class 10.9	
mm x pitch[c]	N-m	ft-lb	N-m	ft-lb	N-m	ft-lb
M 5 X 0.8	4	3	6	5	9	7
M 6 X 1	7	5	11	8	15	11
M 8 X 1.25	17	12	26	19	36	27
M 8 X 1	18	13	28	21	39	29
M10 X 1.5	33	24	52	39	72	53
M10 X 0.75	39	29	61	45	85	62
M12 X 1.75	58	42	91	67	125	93
M12 X 1.5	60	44	95	70	130	97
M12 X 1	90	66	105	77	145	105
M14 X 2	92	68	145	105	200	150
M14 X 1.5	99	73	155	115	215	160
M16 X 2	145	105	225	165	315	230
M16 X 1.5	155	115	240	180	335	245
M18 X 2.5	195	145	310	230	405	300
M18 X 1.5	220	165	350	260	485	355
M20 X 2.5	280	205	440	325	610	450
M20 X 1.5	310	230	650	480	900	665
M24 X 3	480	355	760	560	1050	780
M24 X 2	525	390	830	610	1150	845
M30 X 3.5	960	705	1510	1120	2100	1550
M30 X 2	1060	785	1680	1240	2320	1710
M36 X 3.5	1730	1270	2650	1950	3660	2700
M36 X 2	1880	1380	2960	2190	4100	3220

a. in-tpi = nominal thread diameter in inches-threads per inch

b. N· m = newton-meters

c. mm x pitch = nominal thread diameter in mm x thread pitch

d. ft-lb = foot pounds

Torque tolerance + 0%, -15% of torquing values. Unless otherwise specified use torque values listed above. 25199

Hydraulic Diagrams

Hydraulics are identical to standard YP2425 or YP4025.
Fan mounting hardware is slightly different.

Chain Routing YP2425F

See also “**Chain Maintenance**” on page 39.

Legend:

34T	Sprocket or idler Tooth count
56P	Chain Pitch count
-------	Direction of chain in motion

Ground Drive Chain

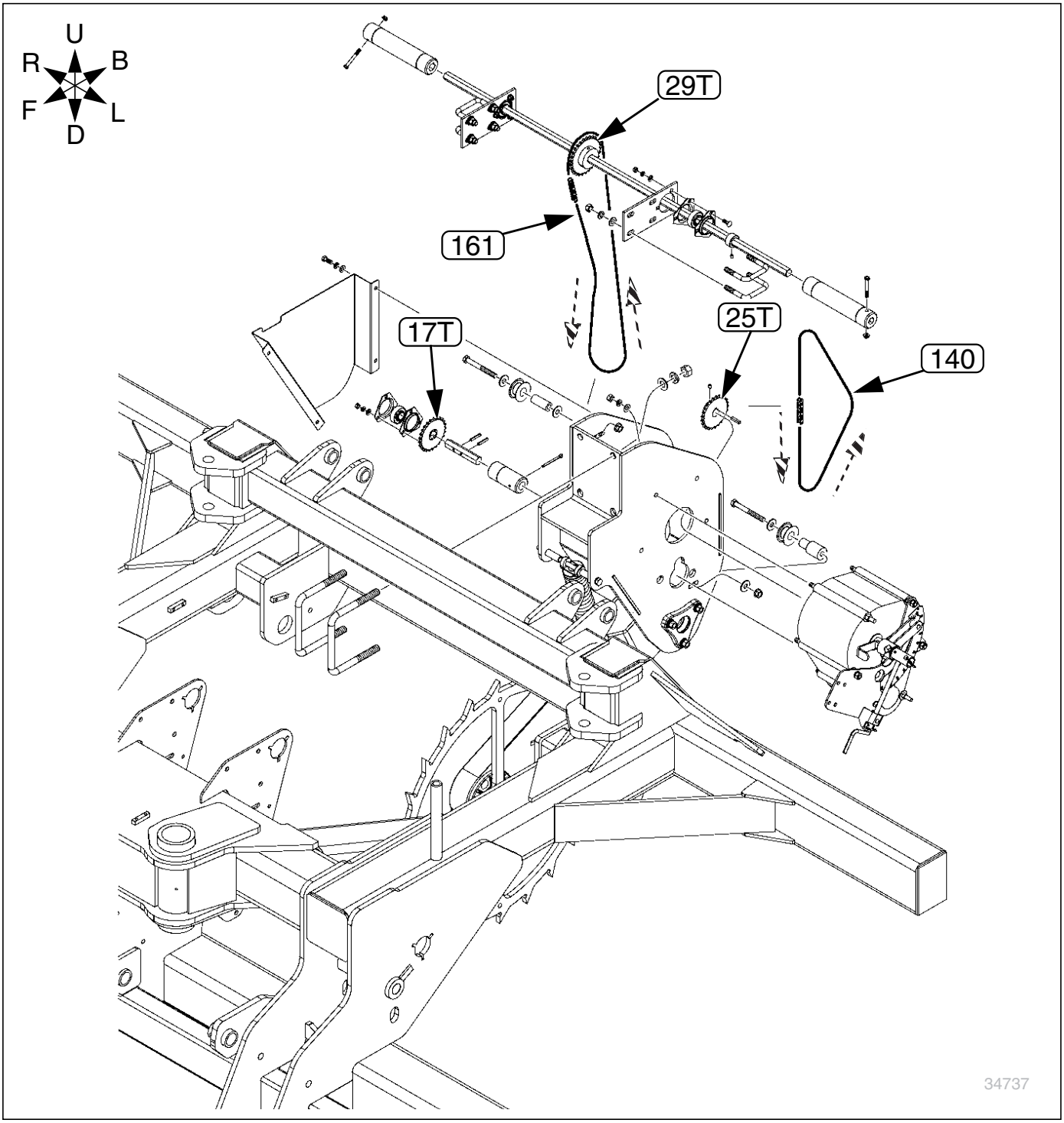

Chain Routing YP4025F

See also "**Chain Maintenance**" on page 39.

Legend:

34T	Sprocket or idler Tooth count
56P	Chain Pitch count
------	Direction of chain in motion

Ground Drive Arm Chain

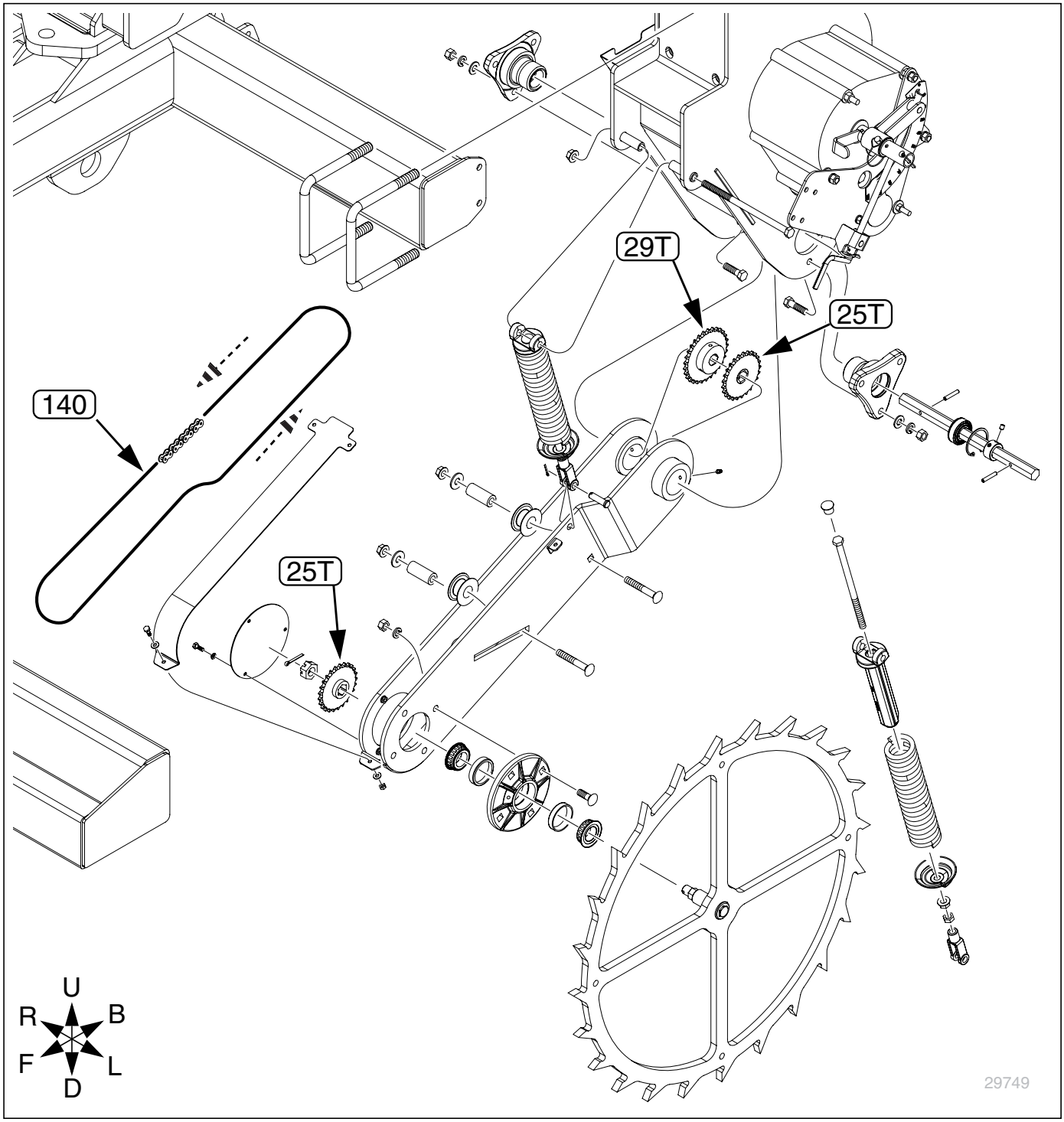

Ground Drive Transmission Chains YP4025F

Note: Gearbox reverses chain direction.

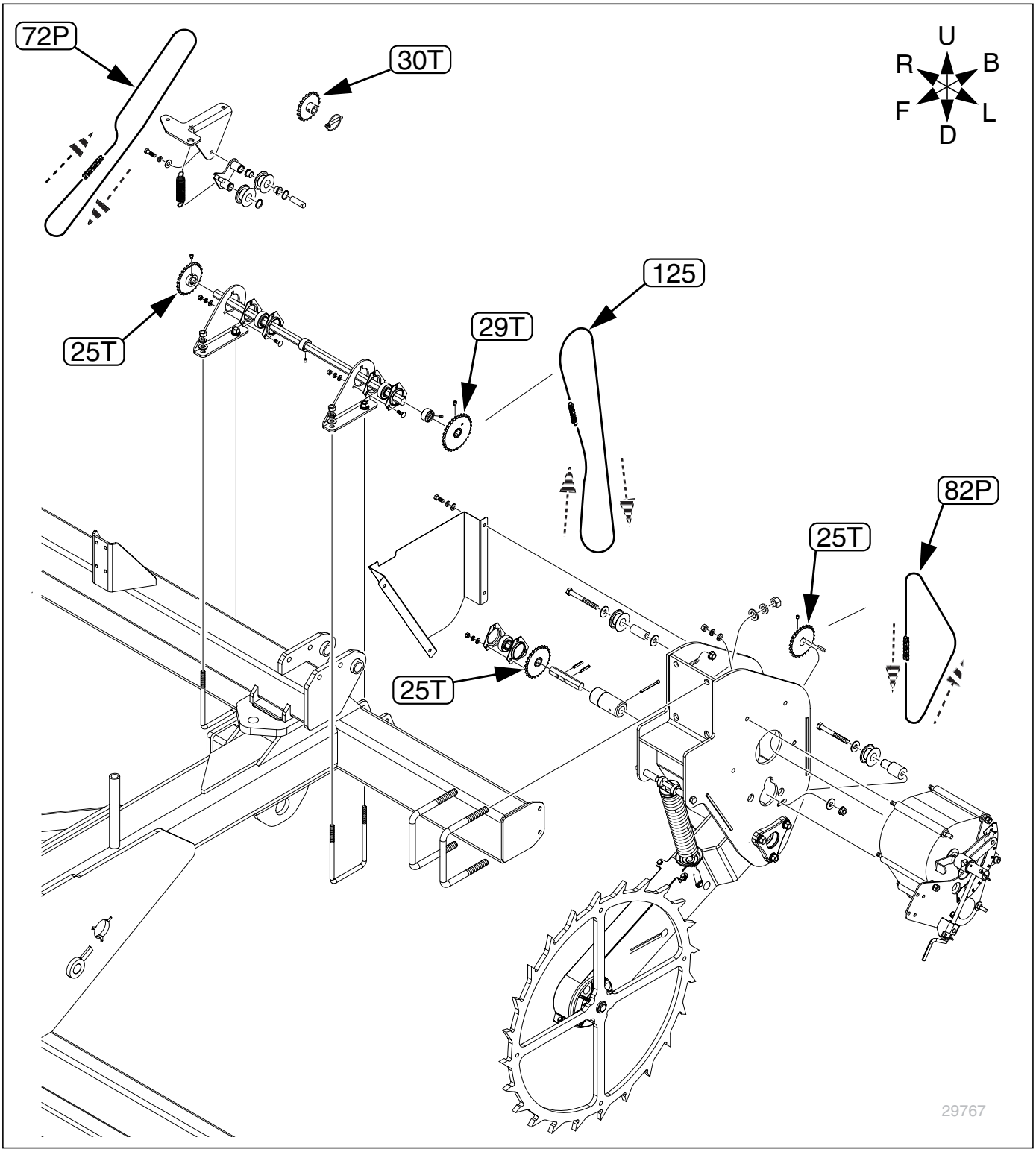

Appendix B - Monitor Setup

Seed Monitor Console Setup

Refer to Appendix B of the Operator manual for DICKEY-john® IntelliAg® console installation. This information below describes the factory settings for the YP2425F-2470, YP4025F-1630 and YP4025F-1670 monitor configuration.

This setup information assumes the Virtual Terminal, Master Switch, Working Set Master Module, Working Set Member Module, and all sensors have been connected and properly installed. Reference Operator's manual for installation instructions.

Pre-Programming Preparation:

1. Power on vehicle via ignition switch to activate Virtual Terminal (VT). Main menu displays pre-programmed default settings.
2. If errors are detected (e.g., failed sensors, incorrect configuration) an alarm and code displays. Alarms are silenced by pressing the Alarm Cancel button CANCEL. Refer to Operator's manual for troubleshooting assistance.

The system has three User Levels. The system loads in User Level 1 (operator level) at every power cycle. A password is required to change to User Level 2 and 3 screens to access setup constants (system configuration).

Note: The master switch is only required for hydraulic control systems. Reference the manual for instructions to assign a master switch as an auxiliary input.

Change User Level to Dealer Level

To change the User Level, a 6-digit password is required. Password includes the five-digit serial number found on the label of the Working Set Master or Information screen.

3. On the IntelliAg Main Work screen, press the Diagnostics button DIAGNOSTIC.
4. At the Diagnostics screen, press the Information button INFO.
5. At the Information screen, record serial number of WSMT.
6. Press the Password button PASSWORD.
7. On the Password screen, enter the 6-digit password as follows: enter the first digit as 2 (for User Level 2). For the next five digits, enter the Working Set Master serial number taken from the WSMT or Information screen.
8. Press the OK button OK. "Dealer screens on" appears at the bottom of screen confirming the password and dealer screens are activated.
9. Press the Work Screen button WORK SCRN to return to the Main Work screen.

Auto Configuration

(Identifies sensors connected to each module)

Auto config is performed at the factory, but may need to be done in the field as changes are made to the system or if options are added to the base planter.

Verify Auto Config results are correct. Check that the correct number of rows are assigned to the correct module and number of hopper sensors are assigned accurately.

To Run Auto Config:

10. Press the Next Page button until the Module Configuration button appears.
11. Press the Module Configuration button .
12. Press the AUTO CONFIG button .
13. Hour glass indicates system is detecting the presence of seed or hopper sensors connected to each module and automatically assigning them to the appropriate module.
14. When Auto Config completes, press the Row Assign button to display the Row Assignment screen to verify correct Row # is assigned to the correct module based on serial number.
15. Enter # of rows assigned to each module.

Module Configuration Screen

		SERIAL NUMBER	MODULE TYPE	MODULE ADDR.
(Optional)	✔	10001	WSMB-POM	1
	✔	10002	WSMB-POM	2
	✔	10001	WSMB-18R	3
	✔	10001	WSMT-GY	4
	✔	10002	WSMB-18R	5
(Optional)	✔	10003	WSMB-POM	6
	✔	10001	WSMB-CFM	7

Seed Sensor Configuration Screen

MODULE ADDR.	MODULE TYPE	# OF ROWS	ROW #'s
1	WSMB-18R	5	1- 5
2	WSMT- GY	6	6-11
3	WSMB-18R	5	12-16

Row Status/Row Width Setup

16. At the Row Assignment screen, press the Row I/O button .
17. Begin entering desired values using Table as reference.
18. Press the Work Screen button when Row Status/Row Width configurations are complete to return to the Main Work screen.

Row Status/Row Width Setup

	Default Value or Value to Enter	Instructions/Definitions
Row Width	YP2425F-2470: 70cm or 27.56in YP4025F-1670: 70cm or 27.56in	Enter row width distance in inches to calculate seed rate correctly.
	YP4025F-1630 30in or 76.2cm	
Auto Update Width	Disabled	Manually enter implement width at Table data entry.
On/Off Pattern	Every Row On	On/Off Pattern indicates specific row patterns to be on or off. Select pre-defined planter All Row On pattern. For other pre-defined planter patterns or individual row settings, see PDC Operator manual.
Pop/Block	Rows	Determines which sensors are used to

Material Configuration Setup (Controlled Hydraulic Drive)

16 different materials can be configured for use as planter controls. Reference the System Configuration section in the PDC Operator manual for additional information.

19. At the Main Menu screen, press the Control Setup button .
20. Select and press one of the Material buttons (Material 1-16).
21. Enter desired values from Table .
22. Press the Control Setup button to return to the Control Setup screen.
23. Repeat steps 2-4 for additional materials.
24. Press the Channel Setup button to proceed to channel setup screen.

Material Setup

	Default Value or Value to Enter	Controlled Hydraulic Drive Instructions/Definitions
Matrl Label	Matrl 1	Material Name can be customized to accurately define the material's type. Creating a name allows for quick identification at the Control Setup screen.
Type	Planter Control	Desired type of application control channel being used for a specific material. The Material Type must correctly match the Control Type to be able to select Material from the Material Summary screen and operate properly.
Units	Ks/Ha or Ks/Ac S/Sec	Automatically changes with the type of material application selected. Changes units for target application.
Preset Metho d	Enable	Enabled Preset Method allows 10 user-defined target rates to be adjusted from the Main Work screen using Inc or Dec buttons. A Disabled Preset Method increases/decreases the target rate based on the % values set at the Material Setup screen.
Seeds per Rev	See Manual	Set to number of seeds per 1 disc revolution.
Disc Low Limit	5 (Singulator Plus) 40 (finger pickup)	Set to desired min seed disc RPM.
Disc High Limit	40 (Singulator Plus) 85 (finger pickup)	Set to desired max seed disc RPM.
High Pop Alarm	15%	This is the percentage above the target population of the planter channel if rows are assigned to the planter channel. If rows are not assigned to a planter, this is the percentage above average planter population for

Planter Control Channel Setup

(Controlled Hydraulic Drive)

25. At the Control Setup screen, press the Channel Setup button .
26. Select Channel 1 and verify that the channel is set to Planter Control.
27. Enter desired values using Table as reference.
28. After planter control setup, calibrate hydraulic valve by pressing the Valve Cal button .
29. Ensure implement is raised. With brakes locked and transmission in PARK position, start engine.
30. Engage hydraulics and run engine at normal speed until hydraulic fluid is at operating temperature.
31. Verify point row clutches are turned ON.

NOTICE

Equipment Damage Risk:
Do NOT perform the next step unless meters are installed in all locations across planter row units or drive damage may occur.

32. Press the START button . Turn the master switch to the ON position.
33. The valve calibration starts immediately. Keep the hydraulics engaged until the calibration completes.
34. When the screen indicates calibration is complete, press the Channel Setup button to return to Channel 1 home screen.
35. Turn the master switch OFF.
36. To set up additional control channels (planter or fertilizer control), press the Next Channel button .
37. Press the Work Screen button when channel configurations are complete to return to the Main Work screen.

Once a control channel has been established as Planter Control, any new materials established as Planter Control on the Material Setup screen are automatically added as optional materials for Planter Control channels on the Control Setup screen.

Planter Control Setup

	Default Value or Value to Enter	Instructions/Definitions
Type	Planter Control	Set desired Channel Type as Planter Control.
Material Name		Displays only materials that have been configured for the channel type.
Control Mode	AUTO	Auto is used in normal operating conditions calculating the rate of how the system is running. Manual mode acts as an override if application rate sensors are inoperable allowing the use of increase/decrease buttons to set the fl ow rate for the control. Refer to System Configuration section of PDC Operator manual for additional information.
Drive Type	PWM	A hydraulic valve varies the oil flow to the motor proportioned to the electric current supplied.
Drive Frequency	100 Hz	If not using a DICKEY-john supplied valve, see the manufacturer's specifications for drive frequency.
Input Filter	50	Feedback frequency filter for the control channel. DO NOT CHANGE.
Gear Ratio	1.900	Specifies the actual ratio from the feedback sensor to the seed meter shaft RPM. Number of revolutions the feedback sensor turns in relation to one revolution the seed meter turns.
Sensor Constant	360	Sensor Constant establishes the number of pulses for one revolution of the feedback sensor. If a DICKEY-john application rate sensor is used, the value should be set to 360.0.
# of Seed Rows		Entry of a specific number of seed rows for the control channel. Row assignment is

Valve Calibration

A valve calibration is required for each control channel that is enabled. If no additional channels are enabled other than one channel, this step can be skipped. Channels must be turned ON for valve calibration to operate.

38. Press the Control Setup button .
39. Press the Channel Setup button .
40. Press the Valve Calibration button .
41. Ensure implement is raised. With brakes locked and transmission in PARK position, start engine.
42. Engage hydraulics and run engine at normal speed until hydraulic fluid is at operating temperature.

NOTICE

Equipment Damage Risk:
Do NOT perform the next step unless meters are installed in all locations across planter row units or drive damage may occur.

43. Press the START button . Turn the master switch to the ON position. The valve calibration starts immediately. Keep the hydraulics engaged until the calibration completes.
44. Repeat for each configured channel.

Row Monitor Setup

45. At the Main Work screen, press the Row Monitor button .
46. Enter desired values using Table as reference.
47. Press the Work Screen button to return to the Main Work screen.

Row Monitor Setup

	Default Value or Value to Enter	Instructions/Definitions
Material Name	See Instructions	Material Name only appears on the Row Monitor Setup screen when all control channels are disabled and material is set for Monitor Only. This is only used for ground drive/non-hydraulic applications to monitor population with high and low alarms. A material must be configured and selected to activate alarms.
High Alarm Delay	5	Desired number of seconds that high population can be above high alarm point before alarm will sound.
Low Alarm Delay	5	Desired number of seconds that low population can be below low alarm point before alarm will sound.
Populati on		Enter a % to allow for seed sensor population inaccuracies

Speed Set Calibration Setup

48. At the Main Work screen, press the Speed Set button .
49. Enter desired values using Table as reference.
50. Press the Work Screen button when ground speed calibration configurations are complete to return to the Main Work screen.

Speed Set

	Default Value or Value to Enter	Instructions/Definitions
Source	Digital Frequency	Select CAN Ground if radar is connected to ISO tractor cab harness. Select Digital Frequency if radar or hall-effect is connected to WSMT actuator harness.
Gspd Constant	10000 (@100 m) 12192 (@400 ft)	Input based on pulse count produced by the ground speed sensor over 100m or 400ft course. See PDC Operator manual for calibration instructions.
Shutoff Speed	0.8 kph 0.5 mph	Set desired minimum ground speed allowed before the system shuts off.
Minimum Override	3.2 kph 2.0 mph	Set to operate when actual ground speed falls below the designated value. Control will operate at this speed until actual ground speed rises above minimum override speed or actual speed drops below shutoff.
Master Sw Timeout	10	Set to desired number of seconds system shuts off if the master switch is turned on and there is no ground speed. Toggle master switch to restart the system and turn off alarm.
Gspd Fail Alarm Delay	5	Set to desired number of seconds alarm sounds after the ground speed is zero and seed flow continues. (Monitor only).
Precharge Ground	0	Set to the desired speed the system will use when a precharge time has been enabled for a control channel. Refer to Table : Planter Control

Accessory Sensor Setup

Hopper Assignment

51. At the Main Work screen, press the Next Page button .
52. Press the Module Configuration button to display the Module Configuration screen.
53. At the Module Configuration screen, press the Hopper Assign button .
54. Press Hopper Set button .
55. Enter desired values using Table as reference.

RPM Assignment

56. At the Module Configuration screen, press the Accessory Assignment button .
57. Press the RPM Setup button .

Note: There must be at least 1 RPM sensor configured before the RPM Setup button appears on the screen.

58. Enter desired values using Table as reference.

Accessory Setup

	Default Value or Value to Enter	Instructions/Definitions
Hopper Setup		
# of Hoppers	2 (base unit) 2 more (optional)	# of hopper sensors connected to each module (4 sensors maximum). # of hopper data items for each listed module and the Hopper #'s value will automatically populate if Auto Config is used to configure installed sensors.
Logic Level	Active Lo	Sets the active state to low signifying that an alarm is generated if the sensor's output is in a low state. Use this setting if the connected sensor outputs a low condition when empty similar to the DICKEY-john hopper sensor.
Alarm Delay	5 sec	Controls the delay time between the detection of a high/low hopper alarm condition and the generation of the resulting alarm. The value is entered in seconds.
Channel		Assigns hopper sensor to channel.
RPM Setup		
High Alarm (fan speed)	4200 rpm	Sets the RPM value at which a high RPM warning error is generated.
Low Alarm (fan speed)	2900 rpm	Sets the RPM value at which a low RPM warning error is generated.
High Alarm Delay	10 sec	Establishes the delay between the detection of a high RPM alarm condition and the resulting alarm display. The value is entered in seconds.
Low Alarm Delay	10 sec	Establishes the delay between the detection of a low RPM alarm condition and the resulting alarm display. The value is entered in seconds.

Clutch Folding Module (CFM) Setup

The CFM is installed in the cab to control row clutches, marker, fold, fertilizer on/off, lift and hitch.

59. At the Main Work screen, press the Clutch CFG button to access the Clutch Configuration screen and verify that the correct # of clutches are configured for the system.

Note: The Clutch CFG button only appears as a top level button when a planter output module and clutch folding module are installed.

Clutch Folding Module Operation

Refer to Figure 25

60. The planter section “CLUTCH” controls ① turn the left, center, and right seeding clutch controls on and off. Dry fertilizer application is unaffected.
61. The master switch ② must be in the ON position to activate any planter section. When a clutch control is ON, a green light illuminates.
62. Marker/Fold Switch ③ should be in the UP (Marker) position during planting. In the DOWN (Fold) position, the switch controls the fold of the main frame.
63. The fertilizer pump switch ④ usually has no function on a YP2425F-2470, YP4025F-1630 and YP4025F-1670 planter. Leave this switch in the DOWN position (OFF).
64. If the planter has the optional hydraulic tongue, the Lift/Hitch switch ⑤ should be in the UP (Lift) position during normal operation (circuit controls implement lift).

    In the “Hitch” position (DOWN), the hydraulic circuit controls the telescoping tongue in preparation of folding the implement for transport.

5 Revolution Test

65. Press the Control Setup button.
66. Press the Channel Setup button.
67. Press the Next Page button.
68. Ensure implement is raised before starting 5 Rev Test.
69. With brakes locked and transmission in PARK position, start tractor engine.
70. Engage hydraulics and run engine at normal speed until hydraulic fluid is at operating temperature.
71. Press the 5 Rev button.

Note: Test Ground Speed and Row data must be entered to perform test.

72. Press and hold remote test button to initiate 5 Rev Test.

# of Clutches 3

	Output	# OF ROWS	ROW #’s
YP4025F	Left	5	1-5
	Center	6	6-11
	Right	5	12-16
YP2425F	Left	9	1-9
	Center	6	10-15
	Right	9	16-24

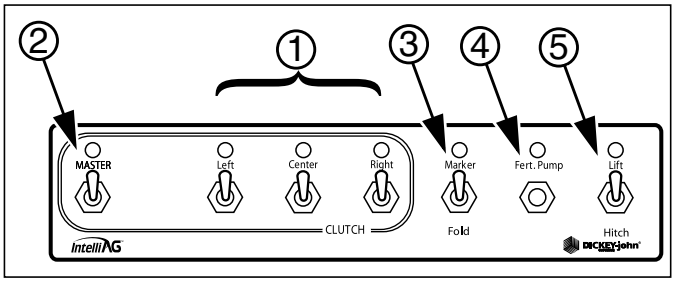

Figure 25 29718
Clutch-Folding Module

NOTICE

Equipment Damage Risk (Hydraulic Tongue Only): *Lift/Hitch switch MUST be in the hitch position and hydraulic circuit in FLOAT when transporting planter equipped with hydraulic-operated tongue hitch.*

Note: Lift/Hitch switch has no function if planter has standard 3-point hitch operated tongue hitch.

Summary Screen

The Summary screen provides an overview of setup constants for active control channels.

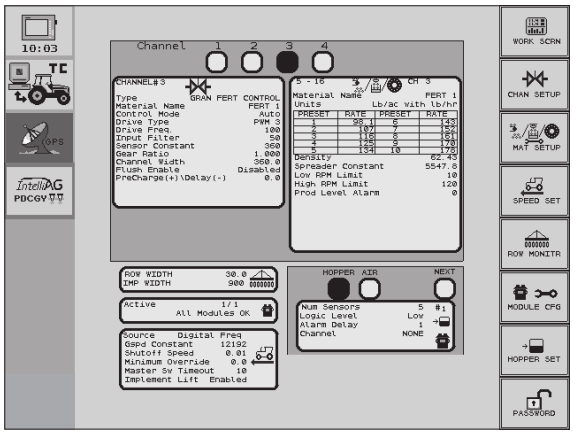

73. At the Main Work screen, press the Next Page button NEXT PAGE.
74. Press the Summary button SUMMARY
75. To view specific control channel configurations, press the respective control channel box 1-4.
76. Press inside a yellow highlighted box to open a specific screen for editing.
77. Press the Work Screen button WORK SCRN to return to the Main Work screen.

Appendix C - Fertilizer Rate Charts

Reading the Fertilizer Rate Chart

1. Locate the chart for your planter model.

2. Find your target rate in the chart.

   Note that each chart is actually two charts, a Low Range and a High Range. The upper rates of the Low Range overlap with the lower rates of the High Range.

70cm Row Spacing					
570 (70cm) Low Range			YP4035F-1670 (70cm) High Ran		
	Gearbox	Meter RPM	Material Rate		Gearbox

w Spacing					
) Low Range			YP4035F-1670 (70cm) High Range		
earbox	Meter RPM	Material Rate		Gearbox	Meter RP
Setting	at 9.7 kph	kg/ha	lbs/ac	Setting	at 9.7 kp
0	0	0	0	0	0
5	-	N/R*	N/R*	5	-
10	-	N/R*	N/R*	10	-
15	-	N/R*	N/R*	15	-
20	0.45	17	15	20	4.4
25	0.80	30	26	25	7.8
30	1.1	42	38	30	11

3. Determine the Final Range gearing required.

   The gear tooth counts are shown on the top of page 63. The gear change procedure is described on page 23.

aterial density plication (see	Charts are based on factory standard ground drive system sprockets, with Range determined by final gears: Low Range: 17T Driving, 54T Driven High Range: 54T Driving, 17T Driven. See page 24 for gear setting. "Meter RPM" is based on a field speed of 9.7 kph

4. Note the reference Material Density used to develop the chart, shown at the top of page 63.

   If your material density is substantially different, or you are planning to apply without calibration, perform a density adjustment (page 66) prior to step 5.

Charts are based on: 11-52-0 fertilizer with a density of: 0.96 kg/liter (60 pounds per cubic foot). If your material has a significantly different density, see "**Density Adjustment**" on page 64

5. Find your target fertilizer rate (which is kilograms-per-hectare or pounds-per-acre).
6. Set the Variable Rate Gearbox control arm as specified in the "Gearbox Setting" column. See page 24 for setting procedure.

Note: Charts begin at setting 20 and end at 90. Settings below 20 and above 90 are not recommended (N/R), other than zero (0), which may be used to temporarily shut off flow from the meter.

w Range					
ox	Meter RPM	YP4035F-1670 (70cm) High Range			
ng	at 9.7 kph	Material Rate		Gearbox	Meter RPM
		kg/ha	lbs/ac	Setting	at 9.7 kph
	0	0	0	0	0
	-	N/R*	N/R*	5	-
	-	N/R*	N/R*	10	-
	-	N/R*	N/R*	15	-
	0.45	17	15	20	4.4
	0.80	30	26	25	7.8
	1.1	42	38	30	11

7. Calibrate for your material (unless applying a material for which you already have calibrated).
8. For the final gearbox and range, note the Meter RPM. Set low and high rpm limits for the shaft sensor. If using a different field speed, scale the chart rpm by the speed ratios:
   ratio = (actual ÷ chart).

w Range					
ox	Meter RPM	YP4035F-1670 (70cm) High Range			
ng	at 9.7 kph	Material Rate		Gearbox	Meter RPM
		kg/ha	lbs/ac	Setting	at 9.7 kph
	0	0	0	0	0
	-	N/R*	N/R*	5	-
	-	N/R*	N/R*	10	-
	-	N/R*	N/R*	15	-
	0.45	17	15	20	4.4
	0.80	30	26	25	7.8

Fertilizer Rates

Rates are approximate, and vary with material density and granularity. Calibrate for accurate application (see page 25).

Charts are based on:
11-52-0 fertilizer with a density of:
0.96 kg/liter (60 pounds per cubic foot).
If your material has a significantly different density, see "**Density Adjustment**" on page 66

Charts are based on factory standard ground drive system sprockets, with Range determined by final gears:
Low Range: 17T Driving, 54T Driven
High Range: 54T Driving, 17T Driven.
See page 23 for gear setting.

"Meter RPM" is based on a field speed of 9.7 kph (6 mph). If using a different field speed, scale RPM proportionately. Set meter rpm limits (for shaft monitor alarm) to ±25% of this value (or as desired).

Fertilizer Rates, 70cm Row Spacing

YP2425F-2470 or YP4025F-1670 (70cm) Low Range			
Material Rate		Gearbox	Meter RPM
kg/ha	lbs/ac	Setting	at 9.7 kph
0	0	0	0
N/R*	N/R*	5	-
N/R*	N/R*	10	-
N/R*	N/R*	15	-
1.7	1.5	20	0.45
3.0	2.7	25	0.80
4.3	3.9	30	1.1
6.2	5.6	35	1.7
8.1	7.3	40	2.2
10	9	45	2.8
13	11	50	3.4
16	14	55	4.1
19	17	60	4.9
22	20	65	5.9
26	23	70	6.8
30	26	75	7.8
33	30	80	8.8
37	33	85	9.9
42	37	90	11.0
N/R*	N/R*	95	-
N/R*	N/R*	100	-

* Not Recommended.

YP2425F-2470 or YP4025F-1670 (70cm) High Range			
Material Rate		Gearbox	Meter RPM
kg/ha	lbs/ac	Setting	at 9.7 kph
0	0	0	0
N/R*	N/R*	5	-
N/R*	N/R*	10	-
N/R*	N/R*	15	-
17	15	20	4.4
30	26	25	7.8
42	38	30	11
61	54	35	16
80	71	40	21
102	91	45	27
124	110	50	33
153	137	55	40
182	163	60	48
217	194	65	57
252	225	70	67
289	258	75	76
325	290	80	86
366	327	85	97
407	364	90	108
N/R*	N/R*	95	-
N/R*	N/R*	100	-

* Not Recommended.

31096m

Fertilizer Rates, 30 inch Row Spacing

YP4025F-1630 (30in) Low Range			
Material Rate		Gearbox	Meter RPM
kg/ha	lbs/ac	Setting	at 6 mph
0	0	0	0
N/R*	N/R*	5	-
N/R*	N/R*	10	-
N/R*	N/R*	15	-
1.6	1.4	20	0.45
2.8	2.5	25	0.80
4.0	3.5	30	1.1
5.7	5.1	35	1.7
7.5	6.7	40	2.2
9.6	8.5	45	2.8
11.6	10.4	50	3.4
14	12.8	55	4.1
17	15	60	4.9
20	18	65	5.9
24	21	70	6.8
27	24	75	7.8
31	27	80	8.8
34	31	85	9.9
38	34	90	11.0
N/R*	N/R*	95	-
N/R*	N/R*	100	-

* Not Recommended.

YP4025F-1630 (30in) High Range			
Material Rate		Gearbox	Meter RPM
kg/ha	lbs/ac	Setting	at 6 mph
0	0	0	0
N/R*	N/R*	5	-
N/R*	N/R*	10	-
N/R*	N/R*	15	-
15	14	20	4.4
27	24	25	7.8
39	35	30	11
56	50	35	16
73	65	40	21
93	83	45	27
114	101	50	33
141	126	55	40
167	150	60	48
200	178	65	57
232	207	70	67
265	237	75	76
299	267	80	86
337	301	85	97
374	334	90	108
N/R*	N/R*	95	-
N/R*	N/R*	100	-

* Not Recommended.

31096u

Density Adjustment

If your material (seed or fertilizer) has a density that is materially different from the reference material listed at the top of each chart, you can compensate for it.

Density variance is only one of many factors that can cause an actual rate to vary from a chart rate. Compensating your initial target rate helps reduce the error, but rely on calibration for the most accurate field results.

In this example, the target fertilizer application rate is 120 kilograms per hectare.

Example:
Target fertilizer rate is 120 kilograms per hectare

1. Weigh a known volume of your material, and compute the density in the same units used in the table, kilograms per liter (pounds per bushel or pounds per cubic foot). Be sure to subtract out the container weight.

Example:
10 liters of your material weighs 14 kg.
Your material density is: 14 ÷ 10
which is: 1.4 kg per liter

The chart was based on 0.96 kg/l reference material that is 134% heavier. If the chart value for “120” (a variable rate gearbox setting of 45,) is used, too much material will be applied.

2. Divide the reference material density by the measured actual material density, to obtain a correction factor.

$$Factor = \frac{ReferenceMaterialDensity}{MeasuredMaterialDensity}$$

Example:
reference material: 0.96 kg/l
factor: 0.96 ÷ 1.4
which is: 68.6%

3. Multiply the target field rate by the factor to yield an adjusted chart rate.

$$AdjustedRate = FieldRate \times Factor$$

Example:
if the target field rate is 120 kilograms per hectare, the adjusted chart rate is:
120 x .686
which is an adjusted target rate of:
82 kilograms per hectare

4. Look up the adjusted rate in the chart, and use the settings for it.

Note: If the adjusted chart rate would correspond to an apparent variable rate gearbox setting below 20, use another chart (Low Range chart or lower Flute Stars chart).

Example:
Look up 82.
Closest chart value is 90
Use those settings:
High Range
Gearbox 40
Be sure to calibrate (page 25), to verify the adjustment and setting.

Index

A
adhesion 25
agitator shaft 23
air pressure 17
air release 15
air release vent 14
air system ..... 14 , 16
airbox manifold 14
airbox seed inlet 14
Alarm Cancel 53
applicator ..... 16 , 17 , 29
auger ..... 11 , 12
Auto Config 54
Auto Update Width 54

B
bar 19
basket 12
blade 29
Blockage 20
blockage detection 31
blockage sensor ..... 16 , 17 , 20
bridge ..... 37 , 38
bridges ..... 3 , 37
bridging ..... 31 , 32
bulk-box 6
butterfly valve ..... 17 , 19 , 31
  fertilizer ..... 16 , 17
  seed ..... 14 , 15

C
CAL CONST 20
calibration 25
calibration door ..... 16 , 17 , 27 , 35
capacities ..... 47 , 48
case drain 18
CAUTION, defined 1
center of gravity 10
chain
  meter drive 39
chain clip 39
chain maintenance 39
chain routing YP2425F 50
chain routing YP4025F 51
Channel Setup ..... 55 , 56 , 57 , 60
check valve, fan 18
checklists
  air system 21
  electrical 21
  field 21
  hydraulic system 21
  mechanical 21
  meter drive 21
  pre-start 9
  row units 21
chemical 5
chemicals 2
clean-out 35
clean-out door ..... 16 , 17 , 35
clean-out, problem 36
clip, chain 39
Clutch CFG 60
cm H2O 19
confined space ..... 3 , 4 , 12
congealed materials 36
console
  seed monitor 53
container, sample 26
Control Setup ..... 55 , 57 , 60
corrosive 21
cotton 45
coulter ..... 16 , 17 , 29
coulter tine 29
coupler 15
covered models 6
crank ..... 25 , 26 , 27
cranking speed 25
crusts ..... 3 , 37 , 38

D
DANGER, defined 1
decal replacement 4
decals
  caution
    chemical hazard 5
    entangle/crush 5
    eye protection 5
  warning
    confined space 4
decal, safety 4
definitions 7
density ..... 25 , 32 , 62 , 66
detector blockage 16
Diagnostics 53
DICKEY-john® ..... 6 , 20 , 53
directions 7
disposal, chemical 2
door
  calibration ..... 17 , 27
  clean-out 17
door, calibration 16
door, clean-out 16
drive
  meter 14
DRIVEN 23
DRIVING ..... 23 , 27
dust 37

E
earmuff 2
entanglement 5
entrapment ..... 3 , 37
entry, hopper 37
equipment, safety 2
example
  calibration 28
  density 66
excessive rpm 19
eye protection 5
Ezee Glide Plus 45

F
face shield 2
fan ..... 14 , 15 , 16 , 17 , 19
fan hoses 18
fan operation 18
fan rpm 18
fan rpm sensor ..... 14 , 16
fan speed ..... 18 , 31
fertilizer butterfly valve 16
fertilizer hopper ..... 16 , 17
fertilizer level sensor 16
fertilizer meter ..... 16 , 17
fertilizer rate 6
fertilizer shut-off 9
field conditions 25
field operation 21
finger pickup 15
fire 1
flute shaft 36
flute stars ..... 16 , 17 , 36
FMC Force 30
force, coulter 30
Force, FMC 30
fumes ..... 3 , 37

G
gear range 23
gearbox 24
gears 5
gears, range ..... 16 , 17
gloves 2
goggles 2
gpm, fan 18
GRAN FERT 20
granular system 6
granularity 25
graphite powder 45

H
hard ground 25
headphones 2
hearing 2
High Range ..... 23 , 62
hitching 8
hopper 3
  fertilizer ..... 16 , 17
  seed 14
hopper entry ..... 3 , 38
hopper level sensor 38
hopper pressure 18
Hopper Set 59
hopper, seed 11
hose
  seed 14
hose, fan 18
humidity ..... 25 , 45
hydraulic diagram 49
hydraulic fan ..... 2 , 14 , 15 , 16
hydraulic flow 19
hydraulic hose 18

I
in H2O 19
Information 53
inhalation hazard ..... 11 , 12
IntelliAg® ..... 6 , 20 , 53
intended usage 6

K
kPa 19

L
ladder ..... 11 , 17
latch 11
leak 31
left-hand, defined 7
level sensor ..... 15 , 20
  fertilizer 16
  seed 14
level sensor, hopper 38
lid, fertilizer 12
lid, seed 11
Lift/Hitch 60
limits, rpm 20
liquid fertilizer 13
loading materials 11
Low Range ..... 23 , 62
lubricant, seed 45

M
maintenance 34
maintenance safety 3
manifold ..... 15 , 16 , 17
  fertilizer air 16
  seed 14
manifold, airbox 14
marker operation 20
Marker/Fold 60
master switch ..... 53 , 60
Material 55
material clean-out 35
material rate ..... 6 , 23
material safety data sheets 38
meter
  fertilizer 17
  seed 14
meter box, removing 37
meter chain 39
meter drive 14
meter rpm 62
meter sample ..... 25 , 27
meter, fertilizer 16
meter, seed 15
milo 45
Module Configuration ..... 54 , 59
moment arm 10
motor seals 18
MSDS 38

N
Next Channel 56
Next Page ..... 54 , 59 , 60 , 61
Note, defined 7
NOTICE, defined 7
no-till 30

O
obstructions 38
OK 53
On/Off Pattern 54
operation
  marker 20
options 46
orientation rose 7
OSHA 38
oxygen 37

P
parking 21
Password 53
password 53
permit-required confined space ..... 3 , 38
personal safety equipment 2
pests 12
piston 11
Population 20
Pop/Block Pattern 54
pressure 19
pressure sensor ..... 16 , 17 , 20
protection, hearing 2
protective equipment 2
psi 19

Q
QD coupler 18
QD (Quick Disconnect) 18
Quick Disconnect 18

R
railing ..... 11 , 12
range gears ..... 16 , 17 , 23
rate chart 62
rate, material 23
reflectors, safety 4
remove meter box 37
respirator 2
return line, fan 18
reverse fan 18
reversed fan 18
reverse, fan 31
revolutions 25
right-hand, defined 7
rocky conditions 30
rose, orientation 7
Row Assign 54
Row I/O 54
Row Monitor 57
row number 20
row sample ..... 25 , 26
rpm ..... 15 , 17
rpm limits 20
rpm sensor ..... 16 , 17 , 20
  fan ..... 14 , 16
RPM Setup 59
rpm, engine 19
rpm, excessive 19

S
safety decal 4
safety equipment 2
safety information 1
  hopper entry 37
safety symbol 1
scale, gearbox 24
seal, lid 12
seed butterfly valve ..... 14 , 15
seed hopper ..... 11 , 14 , 15
seed hose 14
seed inlet, airbox 14
seed level sensor 14
seed lubricant ..... 2 , 45
seed meter ..... 14 , 15
seed monitor 6
seed monitor console 53
Seed Monitor Manual Level 1 7
Seed Monitor Manual Level 2 and 3 7
seed sensor ..... 14 , 15
seed treatment 2
seed tube ..... 14 , 15
sensor
  fan ..... 14 , 16
  fertilizer level 16
  pressure 17
  rpm 17
  seed 14
  seed level 14
sensor, blockage 16
sensor, hopper level 38
sensor, pressure 16
sensor, rpm 16
sensor, seed 15
sensor, seed level 15
setup 8
  initial 8
  seasonal 8
shackle 12
shaft monitor ..... 17 , 20
shaft rate 17
shaft, flute 36
shut-off, fertilizer 9
silicone sealant 37
Singulator Plus® 15
slack, chain 39
slide gate ..... 14 , 15
soft ground 25
specifications ..... 47 , 48
speed limit
  forward 10
Speed Set 58
speed to crank 25
springs, coulter 30
stars ..... 16 , 17 , 36
START ..... 56 , 57
storage ..... 12 , 21 , 35
strainer ..... 12 , 36
stubborn material 37
suffocation ..... 3 , 37
Summary 61
sump return 18
symbol, safety 1

T
tables
  adjustments 22
  document family 7
  FMC spring 30

models covered 6
torque values 49
troubleshooting
general ..... 31 , 33
weights 10
talc-graphite lubricant 45
tare ..... 26 , 28
tarp 27
texture 25
tine 29
tool bar height 29
torque
fastener 49
tower ..... 16 , 17
towing vehicle capability 10
toxic gases 37
trailer operations 14
transport 10
treated seed 2
troubleshooting 31
tube
seed 14

U

User Level 53

V

Valve Cal 56
Valve Calibration 57
variable rate gearbox 24
vent ..... 15 , 16 , 17
meter inlet 14
vent structure 11
vent tube structure 3
void ..... 3 , 37
VT 53

W

walkboard 11
WARNING, defined 1
warranty 30
wash 2
wash-out 36
welding 3
wind 2
Work Screen ..... 53 , 54 , 56 , 57 , 58 , 61
WSMT 53

Y

YP2425F weights 10
YP2425F-2470 ..... 6 , 23 , 54 , 56
YP4025F weights 10
YP4025F-1630 ..... 6 , 23 , 54 , 56 , 65
YP4025F-1670 ..... 6 , 23 , 54 , 56 , 64
Y-tube ..... 15 , 35

Z

zero setting 9
zone ..... 17 , 29

Numerics

110011508, manual 7
110011512, manual 7
11-52-0 ..... 25 , 63
150bu hopper 13
2-way 17
20 mph 10
29 CFR 1910.146 38
3-way 17
401-406B, manual ..... 7 , 22 , 23
401-406M, manual . 6 , 7 , 8 , 18 , 22 , 23
401-406P, manual 7
401-571B, manual ..... 7 , 23
401-571M, manual 6 , 7 , 10 , 18 , 22 , 23
401-571P, manual 7
403-362M, manual ..... 6 , 7
403-414H, crank 25
5 Rev Test 60
82bu hopper 13
821-042C, graphite 45
821-060C, graphite 45
821-069C, graphite+talc 45
848-509C, decal 5
848-510C, decal 5
848-519C, decal 4
848-520C, decal 5
848-522C, decal 5

Great Plains Manufacturing, Inc.
Corporate Office: P.O. Box 5060
Salina, Kansas 67402-5060 USA